REVISIONS				
	REV	DESCRIPTION	DATE	APPROVED
	R01	INITIAL RELEASE	2026-11-08	

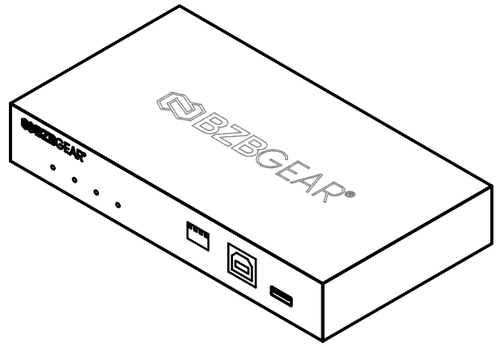

ISOMETRIC VIEW
(REFERENCE, 1:2)

TOP VIEW

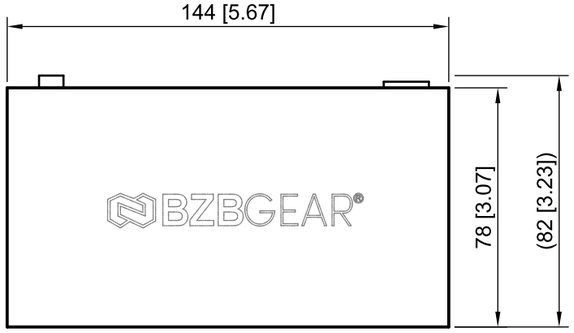

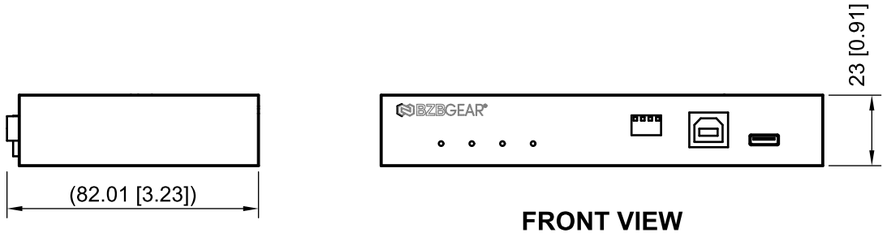

LEFT SIDE VIEW

FRONT VIEW

SPECIFICATIONS (REFERENCE)

PARAMETER	VALUE
HDR SUPPORT	HDR10, HDR10+, Dolby Vision, HLG
HOUSING	Metal enclosure
COLOR	Black
DIMENSIONS	5.7in x 3.1in x 0.91in [144mm x 78mm x 23mm] (TX/RX)
WEIGHT	TX: 0.74lb [337g] / RX: 0.73lb [330g]
POWER SUPPLY	5V/2A locking power adapter (AC 100-240V, 50/60Hz)
POWER CONS.	TX: 5W max / RX: 5W max
OPERATING TEMP.	32°F to 104°F / 0°C to 40°C

NOTES:
1. ALL DIMENSIONS IN MILLIMETERS [INCHES]. DO NOT SCALE DRAWING.
2. DIMENSIONS ARE NOMINAL; TOLERANCE ±0.5 mm [±0.02 in] UNLESS OTHERWISE SPECIFIED.
3. ( ) REFERENCE DIMENSIONS INCLUDE FEET, KNOBS, CONNECTORS AND OTHER PROTRUSIONS.
4. GEOMETRY FROM THE MANUFACTURER CAD; PANEL DETAILS ON THE FOLLOWING SHEETS.
5. CONNECTOR TYPES IDENTIFIED FROM OUTLINE GEOMETRY; CONFIRM AGAINST THE PRODUCT LABELS.

PROPRIETARY: THIS DRAWING AND THE INFORMATION IT CONTAINS ARE THE PROPERTY OF BZBGEAR.
SPECIFICATIONS ARE SUBJECT TO CHANGE WITHOUT NOTICE.

	NAME	DATE
DRAWN	BZBGEAR	2026-11-08
CHECKED		
APPROVED		
UNITS	mm [in]	
TOLERANCE	±0.5 mm [±0.02 in] U.O.S.	
MATERIAL	METAL ENCLOSURE	
FINISH	BLACK	
	THIRD ANGLE PROJECTION	

BZBGEAR®
830 National Dr Ste 140, Sacramento, CA 95834, USA
Office: (888) 499-9906 | Local: +1 (916) 383-3154 | info@bzbgear.com

TITLE
4K 18GBPS HDMI 2.0 FIBER EXTENDER KIT UP TO 10 KM WITH...
OUTLINE DIMENSIONS

MODEL / DWG NO.
BG-EXH-4KFE-TX

SIZE	SCALE	WEIGHT	SHEET	REV
A3	1:2	0.337 kg	1 OF 3	R01

REVISIONS	REV	DESCRIPTION	DATE	APPROVED
	R01	INITIAL RELEASE	2026-11-08	

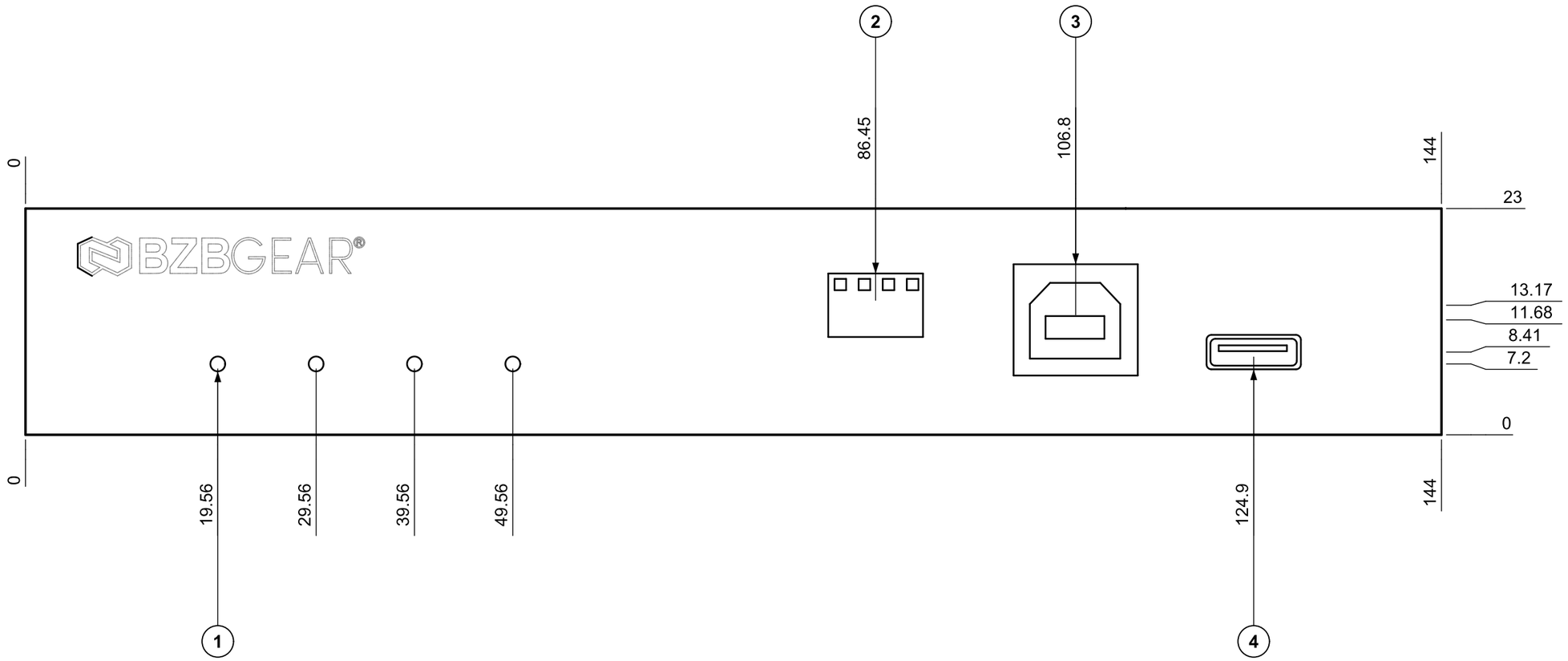

FRONT PANEL

ORDINATE DIMENSIONS TO FEATURE CENTRES FROM THE LOWER-LEFT CORNER OF THE PANEL AS VIEWED.

FRONT PANEL CALLOUTS

ITEM	DESCRIPTION	QTY
1	LED INDICATOR	4
2	PLUGGABLE TERMINAL BLOCK, 4-POLE, 9.63 X 6.46	1
3	USB TYPE-B RECEPTACLE	1
4	USB TYPE-C RECEPTACLE	1

PROPRIETARY: THIS DRAWING AND THE INFORMATION IT CONTAINS ARE THE PROPERTY OF BZBGEAR.
SPECIFICATIONS ARE SUBJECT TO CHANGE WITHOUT NOTICE.

	NAME	DATE
DRAWN	BZBGEAR	2026-11-08
CHECKED		
APPROVED		
UNITS	mm [in]	
TOLERANCE	±0.5 mm [±0.02 in] U.O.S.	
MATERIAL	METAL ENCLOSURE	
FINISH	BLACK	
	THIRD ANGLE PROJECTION	

BZBGEAR®
830 National Dr Ste 140, Sacramento, CA 95834, USA
Office: (888) 499-9906 | Local: +1 (916) 383-3154 | info@bzbgear.com

TITLE
4K 18GBPS HDMI 2.0 FIBER EXTENDER KIT UP TO 10 KM WITH...
FRONT PANEL DETAILS

MODEL / DWG NO.
BG-EXH-4KFE-TX

SIZE	SCALE	WEIGHT	SHEET	REV
A3	2:1	0.337 kg	2 OF 3	R01

REVISIONS	REV	DESCRIPTION	DATE	APPROVED
	R01	INITIAL RELEASE	2026-11-08	

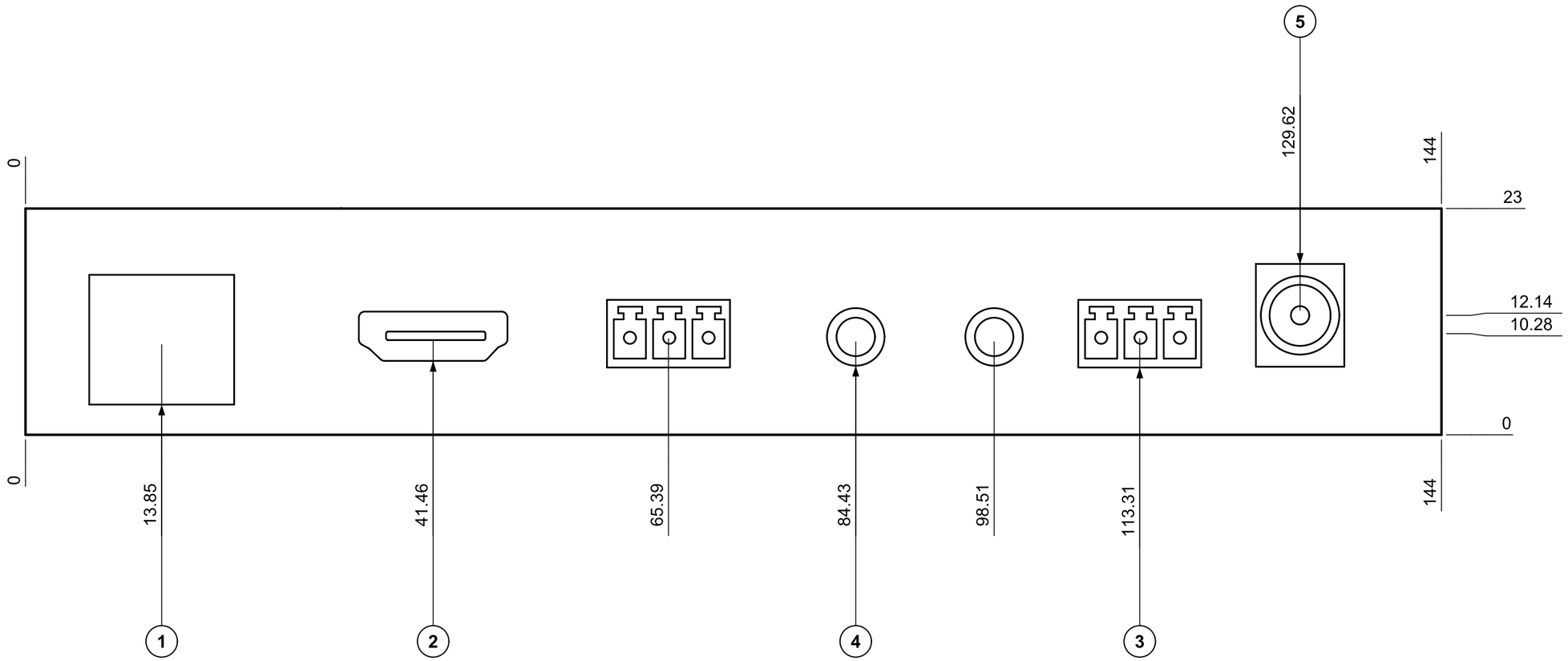

ORDINATE DIMENSIONS TO FEATURE CENTRES FROM THE LOWER-LEFT CORNER OF THE PANEL AS VIEWED.

REAR PANEL
(VIEWED FROM REAR)

REAR PANEL CALLOUTS

ITEM	DESCRIPTION	QTY
1	RJ45 MODULAR JACK	1
2	HDMI TYPE-A RECEPTACLE	1
3	PLUGGABLE TERMINAL BLOCK, 3-POLE, 12.51 X 6.88	2
4	3.5 mm JACK	2
5	DC POWER JACK	1

PROPRIETARY: THIS DRAWING AND THE INFORMATION IT CONTAINS ARE THE PROPERTY OF BZBGEAR.
SPECIFICATIONS ARE SUBJECT TO CHANGE WITHOUT NOTICE.

	NAME	DATE
DRAWN	BZBGEAR	2026-11-08
CHECKED		
APPROVED		
UNITS	mm [in]	
TOLERANCE	±0.5 mm [±0.02 in] U.O.S.	
MATERIAL	METAL ENCLOSURE	
FINISH	BLACK	
	THIRD ANGLE PROJECTION	

BZBGEAR®
830 National Dr Ste 140, Sacramento, CA 95834, USA
Office: (888) 499-9906 | Local: +1 (916) 383-3154 | info@bzbgear.com

TITLE
4K 18GBPS HDMI 2.0 FIBER EXTENDER KIT UP TO 10 KM WITH...
REAR PANEL DETAILS

MODEL / DWG NO.
BG-EXH-4KFE-TX

SIZE	SCALE	WEIGHT	SHEET	REV
A3	2:1	0.337 kg	3 OF 3	R01