| REVISIONS | | | | |
|---|---|---|---|---|
| | REV | DESCRIPTION | DATE | APPROVED |
| | R01 | INITIAL RELEASE | 2026-11-08 | |

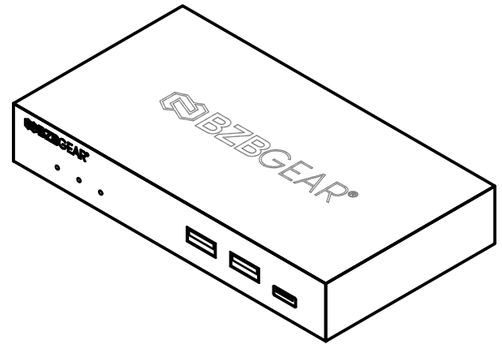


**ISOMETRIC VIEW**
(REFERENCE, 1:2)

**TOP VIEW**

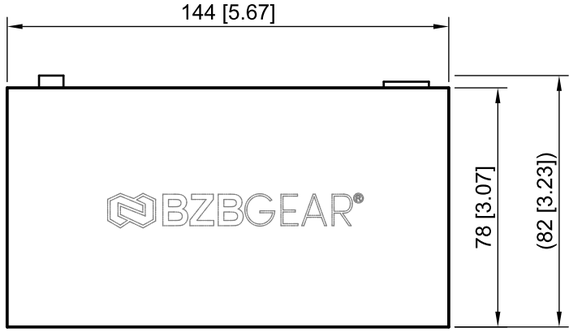


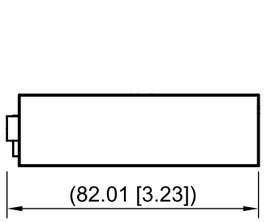


**LEFT SIDE VIEW**




**FRONT VIEW**

**SPECIFICATIONS (REFERENCE)**

| PARAMETER | VALUE |
|---|---|
| HDR SUPPORT | HDR10, HDR10+, Dolby Vision, HLG |
| HOUSING | Metal enclosure |
| COLOR | Black |
| DIMENSIONS | 5.7in x 3.1in x 0.91in [144mm x 78mm x 23mm] (TX/RX) |
| WEIGHT | TX: 0.74lb [337g] / RX: 0.73lb [330g] |
| POWER SUPPLY | 5V/2A locking power adapter (AC 100-240V, 50/60Hz) |
| POWER CONS. | TX: 5W max / RX: 5W max |
| OPERATING TEMP. | 32°F to 104°F / 0°C to 40°C |

**NOTES:**
1. ALL DIMENSIONS IN MILLIMETERS [INCHES]. DO NOT SCALE DRAWING.
2. DIMENSIONS ARE NOMINAL; TOLERANCE ±0.5 mm [±0.02 in] UNLESS OTHERWISE SPECIFIED.
3. ( ) REFERENCE DIMENSIONS INCLUDE FEET, KNOBS, CONNECTORS AND OTHER PROTRUSIONS.
4. GEOMETRY FROM THE MANUFACTURER CAD; PANEL DETAILS ON THE FOLLOWING SHEETS.
5. CONNECTOR TYPES IDENTIFIED FROM OUTLINE GEOMETRY; CONFIRM AGAINST THE PRODUCT LABELS.

PROPRIETARY: THIS DRAWING AND THE INFORMATION IT CONTAINS ARE THE PROPERTY OF BZBGEAR.
SPECIFICATIONS ARE SUBJECT TO CHANGE WITHOUT NOTICE.

| | NAME | DATE |
|---|---|---|
| DRAWN | BZBGEAR | 2026-11-08 |
| CHECKED | | |
| APPROVED | | |
| UNITS | mm [in] | |
| TOLERANCE | ±0.5 mm [±0.02 in] U.O.S. | |
| MATERIAL | METAL ENCLOSURE | |
| FINISH | BLACK | |
| | THIRD ANGLE PROJECTION | |

BZBGEAR®
830 National Dr Ste 140, Sacramento, CA 95834, USA
Office: (888) 499-9906 | Local: +1 (916) 383-3154 | info@bzbgear.com

TITLE
**4K 18GBPS HDMI 2.0 FIBER EXTENDER KIT UP TO 10 KM WITH...**
OUTLINE DIMENSIONS

MODEL / DWG NO.
# BG-EXH-4KFE-RX

| SIZE | SCALE | WEIGHT | SHEET | REV |
|---|---|---|---|---|
| A3 | 1:2 | 0.337 kg | 1 OF 3 | R01 |

| REVISIONS | | | | |
|---|---|---|---|---|
| | REV | DESCRIPTION | DATE | APPROVED |
| | R01 | INITIAL RELEASE | 2026-11-08 | |

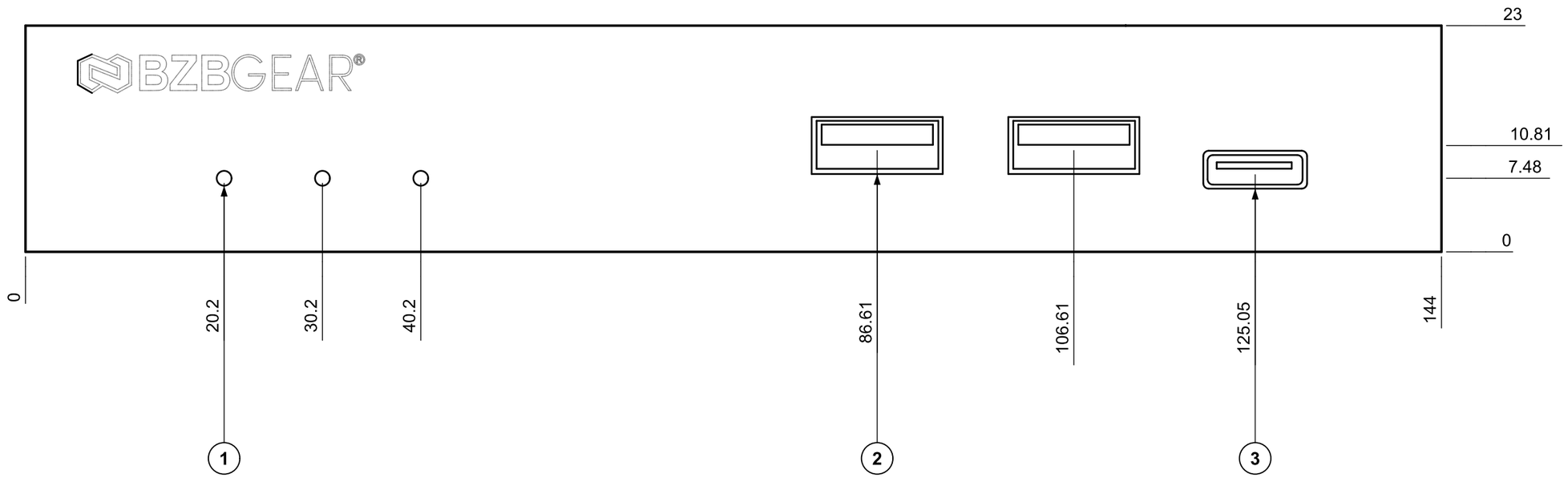


## FRONT PANEL

ORDINATE DIMENSIONS TO FEATURE CENTRES FROM THE LOWER-LEFT CORNER OF THE PANEL AS VIEWED.

### FRONT PANEL CALLOUTS

| ITEM | DESCRIPTION | QTY |
|---|---|---|
| 1 | LED INDICATOR | 3 |
| 2 | USB TYPE-A RECEPTACLE | 2 |
| 3 | OPENING / FEATURE 10.55 X 3.85 | 1 |

PROPRIETARY: THIS DRAWING AND THE INFORMATION IT CONTAINS ARE THE PROPERTY OF BZBGEAR.
SPECIFICATIONS ARE SUBJECT TO CHANGE WITHOUT NOTICE.

| | NAME | DATE |
|---|---|---|
| DRAWN | BZBGEAR | 2026-11-08 |
| CHECKED | | |
| APPROVED | | |
| UNITS | mm [in] | |
| TOLERANCE | ±0.5 mm [±0.02 in] U.O.S. | |
| MATERIAL | METAL ENCLOSURE | |
| FINISH | BLACK | |
| | THIRD ANGLE PROJECTION | |

BZBGEAR®
830 National Dr Ste 140, Sacramento, CA 95834, USA
Office: (888) 499-9906 | Local: +1 (916) 383-3154 | info@bzbgear.com

TITLE
**4K 18GBPS HDMI 2.0 FIBER EXTENDER KIT UP TO 10 KM WITH...**
FRONT PANEL DETAILS

MODEL / DWG NO.
# BG-EXH-4KFE-RX

| SIZE | SCALE | WEIGHT | SHEET | REV |
|---|---|---|---|---|
| A3 | 2:1 | 0.337 kg | 2 OF 3 | R01 |

| REVISIONS | REV | DESCRIPTION | DATE | APPROVED |
|---|---|---|---|---|
| | R01 | INITIAL RELEASE | 2026-11-08 | |

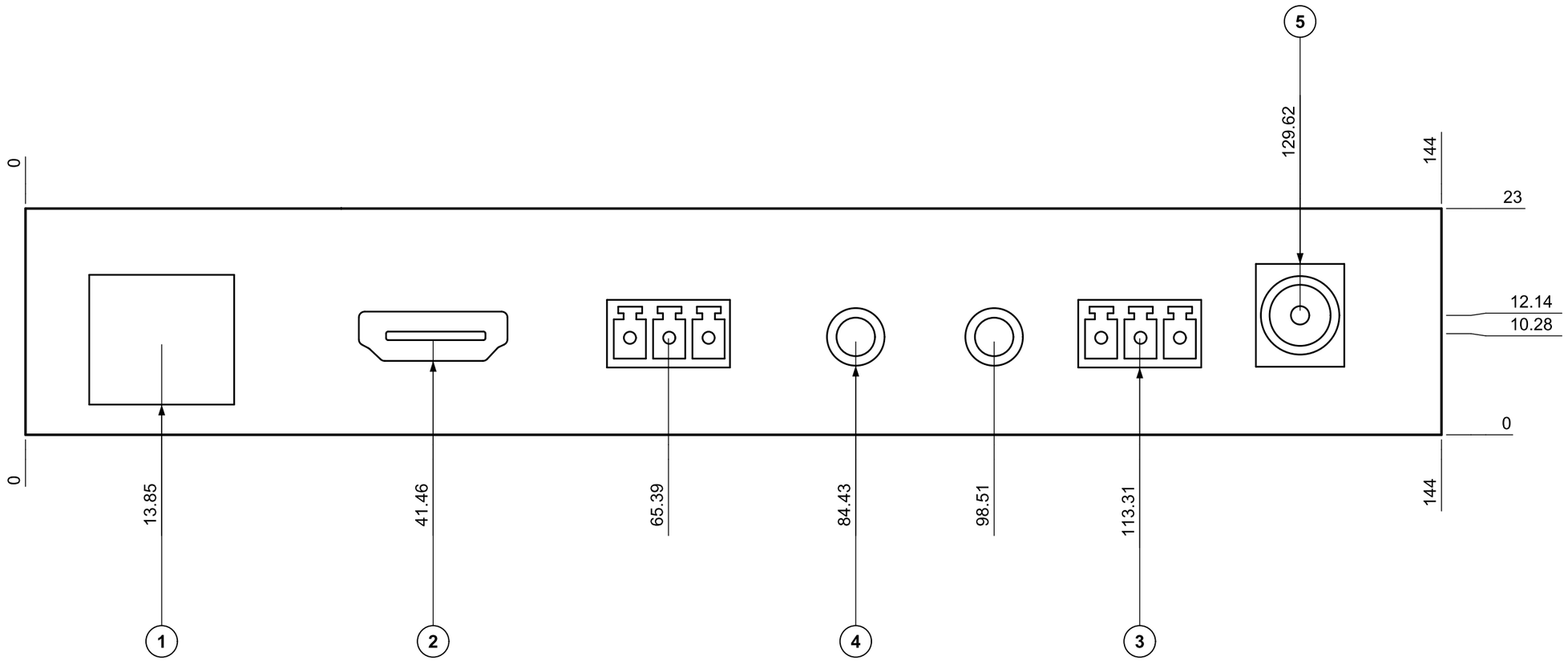


ORDINATE DIMENSIONS TO FEATURE CENTRES FROM THE LOWER-LEFT CORNER OF THE PANEL AS VIEWED.

**REAR PANEL**
(VIEWED FROM REAR)

## REAR PANEL CALLOUTS

| ITEM | DESCRIPTION | QTY |
|---|---|---|
| 1 | RJ45 MODULAR JACK | 1 |
| 2 | HDMI TYPE-A RECEPTACLE | 1 |
| 3 | PLUGGABLE TERMINAL BLOCK, 3-POLE, 12.51 X 6.88 | 2 |
| 4 | 3.5 mm JACK | 2 |
| 5 | DC POWER JACK | 1 |

PROPRIETARY: THIS DRAWING AND THE INFORMATION IT CONTAINS ARE THE PROPERTY OF BZBGEAR.
SPECIFICATIONS ARE SUBJECT TO CHANGE WITHOUT NOTICE.

| | NAME | DATE |
|---|---|---|
| DRAWN | BZBGEAR | 2026-11-08 |
| CHECKED | | |
| APPROVED | | |
| UNITS | mm [in] | |
| TOLERANCE | ±0.5 mm [±0.02 in] U.O.S. | |
| MATERIAL | METAL ENCLOSURE | |
| FINISH | BLACK | |
| | THIRD ANGLE PROJECTION | |

BZBGEAR®
830 National Dr Ste 140, Sacramento, CA 95834, USA
Office: (888) 499-9906 | Local: +1 (916) 383-3154 | info@bzbgear.com

TITLE
**4K 18GBPS HDMI 2.0 FIBER EXTENDER KIT UP TO 10 KM WITH...**
REAR PANEL DETAILS

MODEL / DWG NO.
# BG-EXH-4KFE-RX

| SIZE | SCALE | WEIGHT | SHEET | REV |
|---|---|---|---|---|
| A3 | 2:1 | 0.337 kg | 3 OF 3 | R01 |