REVISIONS	REV	DESCRIPTION	DATE	APPROVED
	R01	INITIAL RELEASE	2026-11-08	

TOP VIEW

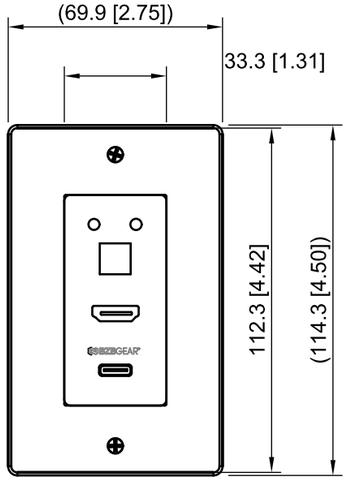

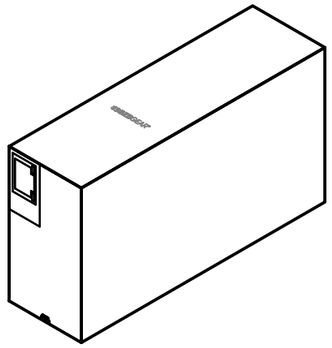

ISOMETRIC VIEW
(REFERENCE, 1:2)

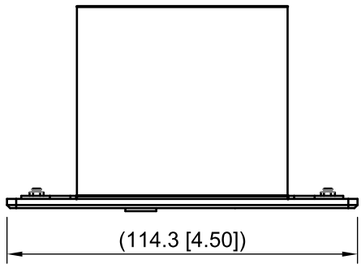

LEFT SIDE VIEW

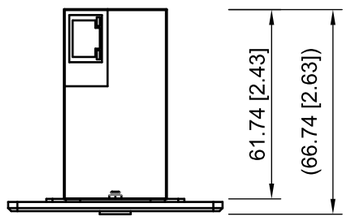

FRONT VIEW

SPECIFICATIONS (REFERENCE)

PARAMETER	VALUE
HDR SUPPORT	HDR, HDR10, HDR10+, Dolby Vision, HLG
SERVICE PORT	1x Mini-USB (firmware update)
HOUSING	Metal enclosure
COLOR	Transmitter: White + Black / Receiver: Black
POWER SUPPLY	AC 100–240V, 50/60Hz to DC 24V/1A
POWER CONS.	Max 4.5W
POWER CONS.	Max 4.7W
POC SUPPORT	Bi-directional Power over Cable
OPERATING TEMP.	32°F to 104°F / 0°C to 40°C

NOTES:

1. ALL DIMENSIONS IN MILLIMETERS [INCHES]. DO NOT SCALE DRAWING.
2. DIMENSIONS ARE NOMINAL; TOLERANCE ±0.5 mm [±0.02 in] UNLESS OTHERWISE SPECIFIED.
3. ( ) REFERENCE DIMENSIONS INCLUDE FEET, KNOBS, CONNECTORS AND OTHER PROTRUSIONS.
4. GEOMETRY FROM THE MANUFACTURER CAD; PANEL DETAILS ON THE FOLLOWING SHEETS.
5. CONNECTOR TYPES IDENTIFIED FROM OUTLINE GEOMETRY; CONFIRM AGAINST THE PRODUCT LABELS.

PROPRIETARY: THIS DRAWING AND THE INFORMATION IT CONTAINS ARE THE PROPERTY OF BZBGEAR.
SPECIFICATIONS ARE SUBJECT TO CHANGE WITHOUT NOTICE.

	NAME	DATE
DRAWN	BZBGEAR	2026-11-08
CHECKED		
APPROVED		
UNITS	mm [in]	
TOLERANCE	±0.5 mm [±0.02 in] U.O.S.	
MATERIAL	METAL ENCLOSURE	
FINISH	TRANSMITTER: WHITE + BLACK / R	
	THIRD ANGLE PROJECTION	

BZBGEAR®
830 National Dr Ste 140, Sacramento, CA 95834, USA
Office: (888) 499-9906 | Local: +1 (916) 383-3154 | info@bzbgear.com

TITLE
4K UHD 18GBPS HDMI/USB-C SWITCHER & HDBASET 3.0 EXTENDER KIT...
OUTLINE DIMENSIONS

MODEL / DWG NO.
BG-USX-WP150HC-TX

SIZE	SCALE	WEIGHT	SHEET	REV
A3	1:2	0.203 kg	1 OF 2	R01

REVISIONS	REV	DESCRIPTION	DATE	APPROVED
	R01	INITIAL RELEASE	2026-11-08	

CONNECTOR REFERENCE

INTERFACE	CONNECTORS / DESCRIPTION
ANALOG AUDIO OUTPUT	LPCM 2.0CH (via receiver 3.5mm output)
HDMI INPUT	1x HDMI Type-A (Female), up to 4K60
USB-C INPUT	1x USB-C (video input support up to 4K60)
HDBASET OUTPUT	1x RJ45 port
RS-232	1x 3-pin Phoenix connector
IR INPUT	1x 3-pin Phoenix connector
IR OUTPUT	1x 2-pin Phoenix connector
DC POWER INPUT	24V/1A
POC SWITCH	ON/OFF selectable bi-directional PoC
HDBASET INPUT	1x RJ45 port
HDMI OUTPUT	1x HDMI Type-A (Female)
AUDIO OUTPUT	1x 3.5mm stereo jack (analog de-embedded audio)
IR INPUT	1x 3.5mm stereo jack
IR OUTPUT	1x 3.5mm stereo jack
RS-232	1x 3-pin Phoenix connector
SERVICE PORT	1x Mini-USB (firmware update)
DC POWER INPUT	24V/1A
TRANSMITTER DIMENSIONS	2.7 x 1.5 x 4.5 in [69.8 x 39 x 114 mm]
RECEIVER DIMENSIONS	5.5 x 2.6 x 0.71 in [140 x 65 x 18 mm]
TRANSMITTER WEIGHT	0.45 lb [203 g]
RECEIVER WEIGHT	0.34 lb [155 g]
POWER SUPPLY	AC 100–240V, 50/60Hz to DC 24V/1A

NOTES:

1. CONNECTOR LIST FROM THE PRODUCT TECHNICAL SPECIFICATIONS ON BZBGEAR.COM.
2. CONNECTOR POSITIONS: SEE SHEET 1 (MANUFACTURER VIEWS).
3. CONFIRM CONNECTOR TYPES AND LABELS AGAINST THE PRODUCT.

PROPRIETARY: THIS DRAWING AND THE INFORMATION IT CONTAINS ARE THE PROPERTY OF BZBGEAR.
SPECIFICATIONS ARE SUBJECT TO CHANGE WITHOUT NOTICE.

	NAME	DATE
DRAWN	BZBGEAR	2026-11-08
CHECKED		
APPROVED		
UNITS	mm [in]	
TOLERANCE	±0.5 mm [±0.02 in] U.O.S.	
MATERIAL	METAL ENCLOSURE	
FINISH	TRANSMITTER: WHITE + BLACK / R	
	THIRD ANGLE PROJECTION	

BZBGEAR®
830 National Dr Ste 140, Sacramento, CA 95834, USA
Office: (888) 499-9906 | Local: +1 (916) 383-3154 | info@bzbgear.com

TITLE
4K UHD 18GBPS HDMI/USB-C SWITCHER & HDBASET 3.0 EXTENDER KIT...
CONNECTORS (INPUTS / OUTPUTS / CONTROL / POWER)

MODEL / DWG NO.
BG-USX-WP150HC-TX

SIZE	SCALE	WEIGHT	SHEET	REV
A3	NTS	0.203 kg	2 OF 2	R01