REVISIONS				
	REV	DESCRIPTION	DATE	APPROVED
	R01	INITIAL RELEASE	2026-11-08	



ISOMETRIC VIEW
(REFERENCE, 1:2)

TOP VIEW

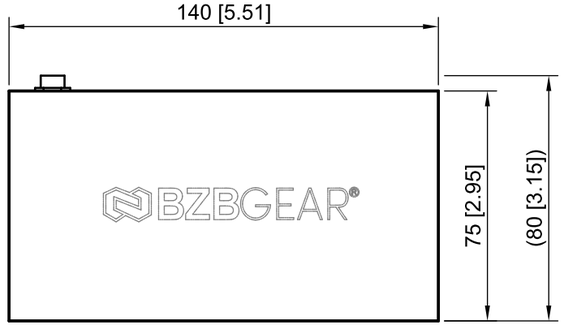

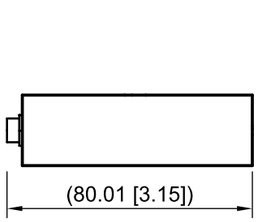

LEFT SIDE VIEW



FRONT VIEW

SPECIFICATIONS (REFERENCE)

PARAMETER	VALUE
POWER SUPPLY	DC 24V / 3.75A (AC 100–240V, 50/60Hz adapter)
CONTROL PORTS	1x RS-232 (3-pin Phoenix), 1x FSYNC (1-pin Phoenix), 1x USB-C S...
CONTROL PORTS	1x RS-232 (3-pin Phoenix), 1x FSYNC (1-pin Phoenix), 1x USB-C S...
HOUSING	TX: Plastic front panel + metal enclosure; RX: Metal enclosure
COLOR	TX: White + Black; RX: Black
DIMENSIONS	TX: 1.8 x 1.7 x 4.1 in [45 x 42 x 103.5 mm]; RX: 5.5 x 3 x 0.91 in [14...
WEIGHT	TX: 0.25 lb [115g]; RX: 0.70 lb [318g]
OPERATING TEMP.	32°F ~ 104°F / 0°C ~ 40°C

NOTES:
1. ALL DIMENSIONS IN MILLIMETERS [INCHES]. DO NOT SCALE DRAWING.
2. DIMENSIONS ARE NOMINAL; TOLERANCE ±0.5 mm [±0.02 in] UNLESS OTHERWISE SPECIFIED.
3. ( ) REFERENCE DIMENSIONS INCLUDE FEET, KNOBS, CONNECTORS AND OTHER PROTRUSIONS.
4. GEOMETRY FROM THE MANUFACTURER CAD; PANEL DETAILS ON THE FOLLOWING SHEETS.
5. CONNECTOR TYPES IDENTIFIED FROM OUTLINE GEOMETRY; CONFIRM AGAINST THE PRODUCT LABELS.

PROPRIETARY: THIS DRAWING AND THE INFORMATION IT CONTAINS ARE THE PROPERTY OF BZBGEAR.
SPECIFICATIONS ARE SUBJECT TO CHANGE WITHOUT NOTICE.

	NAME	DATE
DRAWN	BZBGEAR	2026-11-08
CHECKED		
APPROVED		
UNITS	mm [in]	
TOLERANCE	±0.5 mm [±0.02 in] U.O.S.	
MATERIAL	TX: PLASTIC FRONT PANEL + META	
FINISH	TX: WHITE + BLACK; RX: BLACK	
	THIRD ANGLE PROJECTION	

BZBGEAR®
830 National Dr Ste 140, Sacramento, CA 95834, USA
Office: (888) 499-9906 | Local: +1 (916) 383-3154 | info@bzbgear.com

TITLE
DUAL-HOST USB 3.2 TYPE-A/B/C WALL PLATE SWITCHER & HDBASET...
OUTLINE DIMENSIONS

MODEL / DWG NO.
BG-USX-WP100BC-RX

SIZE	SCALE	WEIGHT	SHEET	REV
A3	1:2	0.115 kg	1 OF 3	R01

REVISIONS				
	REV	DESCRIPTION	DATE	APPROVED
	R01	INITIAL RELEASE	2026-11-08	

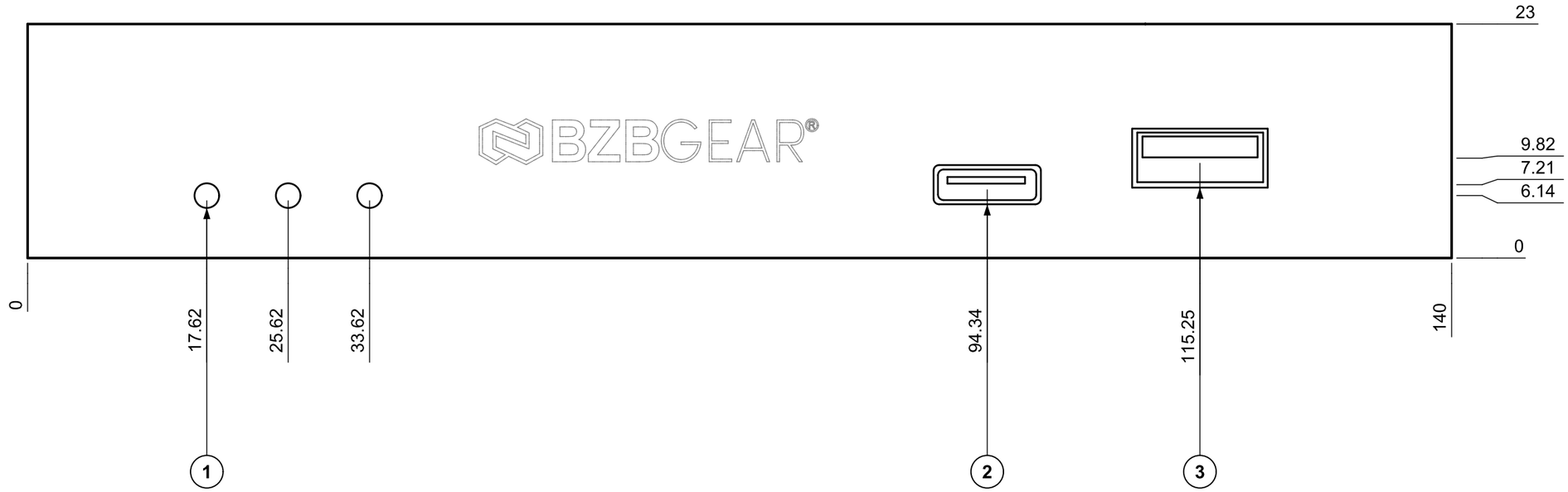

FRONT PANEL

ORDINATE DIMENSIONS TO FEATURE CENTRES FROM THE LOWER-LEFT CORNER OF THE PANEL AS VIEWED.

FRONT PANEL CALLOUTS

ITEM	DESCRIPTION	QTY
1	LED INDICATOR	3
2	OPENING / FEATURE 10.55 X 3.85	1
3	USB TYPE-A RECEPTACLE	1

PROPRIETARY: THIS DRAWING AND THE INFORMATION IT CONTAINS ARE THE PROPERTY OF BZBGEAR.
SPECIFICATIONS ARE SUBJECT TO CHANGE WITHOUT NOTICE.

	NAME	DATE
DRAWN	BZBGEAR	2026-11-08
CHECKED		
APPROVED		
UNITS	mm [in]	
TOLERANCE	±0.5 mm [±0.02 in] U.O.S.	
MATERIAL	TX: PLASTIC FRONT PANEL + META	
FINISH	TX: WHITE + BLACK; RX: BLACK	
	THIRD ANGLE PROJECTION	

BZBGEAR®
830 National Dr Ste 140, Sacramento, CA 95834, USA
Office: (888) 499-9906 | Local: +1 (916) 383-3154 | info@bzbgear.com

TITLE
DUAL-HOST USB 3.2 TYPE-A/B/C WALL PLATE SWITCHER & HDBASET..
FRONT PANEL DETAILS

MODEL / DWG NO.
BG-USX-WP100BC-RX

SIZE	SCALE	WEIGHT	SHEET	REV
A3	2:1	0.115 kg	2 OF 3	R01

REVISIONS				
	REV	DESCRIPTION	DATE	APPROVED
	R01	INITIAL RELEASE	2026-11-08	

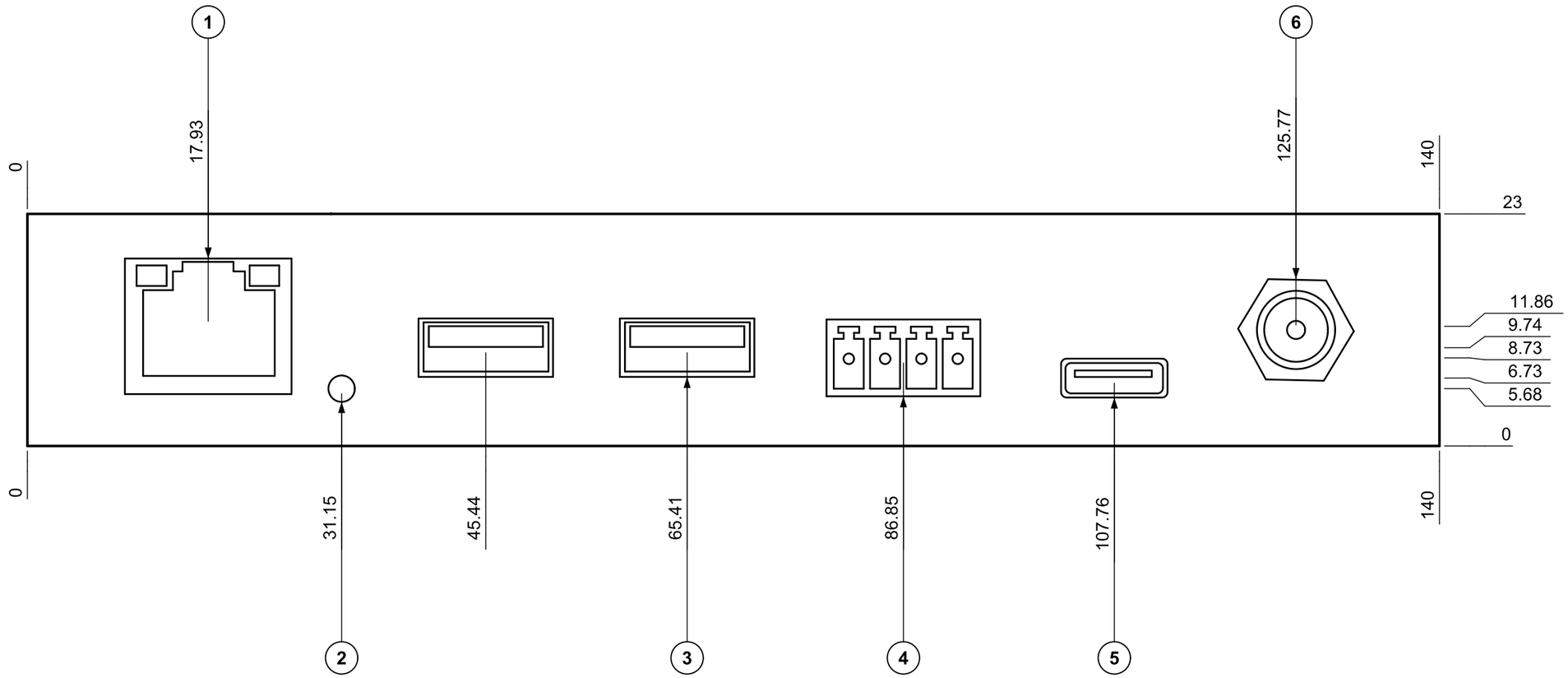

ORDINATE DIMENSIONS TO FEATURE CENTRES FROM THE LOWER-LEFT CORNER OF THE PANEL AS VIEWED.

REAR PANEL
(VIEWED FROM REAR)

REAR PANEL CALLOUTS

ITEM	DESCRIPTION	QTY
1	RJ45 MODULAR JACK	1
2	LED / IR / PINHOLE OPENING Ø2.62	1
3	USB TYPE-A RECEPTACLE	2
4	PLUGGABLE TERMINAL BLOCK, 4-POLE, 15.25 X 7.61	1
5	OPENING / FEATURE 10.55 X 3.85	1
6	USB TYPE-B RECEPTACLE	1

PROPRIETARY: THIS DRAWING AND THE INFORMATION IT CONTAINS ARE THE PROPERTY OF BZBGEAR.
SPECIFICATIONS ARE SUBJECT TO CHANGE WITHOUT NOTICE.

	NAME	DATE
DRAWN	BZBGEAR	2026-11-08
CHECKED		
APPROVED		
UNITS	mm [in]	
TOLERANCE	±0.5 mm [±0.02 in] U.O.S.	
MATERIAL	TX: PLASTIC FRONT PANEL + META	
FINISH	TX: WHITE + BLACK; RX: BLACK	
	THIRD ANGLE PROJECTION	

BZBGEAR®
830 National Dr Ste 140, Sacramento, CA 95834, USA
Office: (888) 499-9906 | Local: +1 (916) 383-3154 | info@bzbgear.com

TITLE
DUAL-HOST USB 3.2 TYPE-A/B/C WALL PLATE SWITCHER & HDBASET..
REAR PANEL DETAILS

MODEL / DWG NO.
BG-USX-WP100BC-RX

SIZE	SCALE	WEIGHT	SHEET	REV
A3	2:1	0.115 kg	3 OF 3	R01