REVISIONS	REV	DESCRIPTION	DATE	APPROVED
	R01	INITIAL RELEASE	2026-11-08	

TOP VIEW

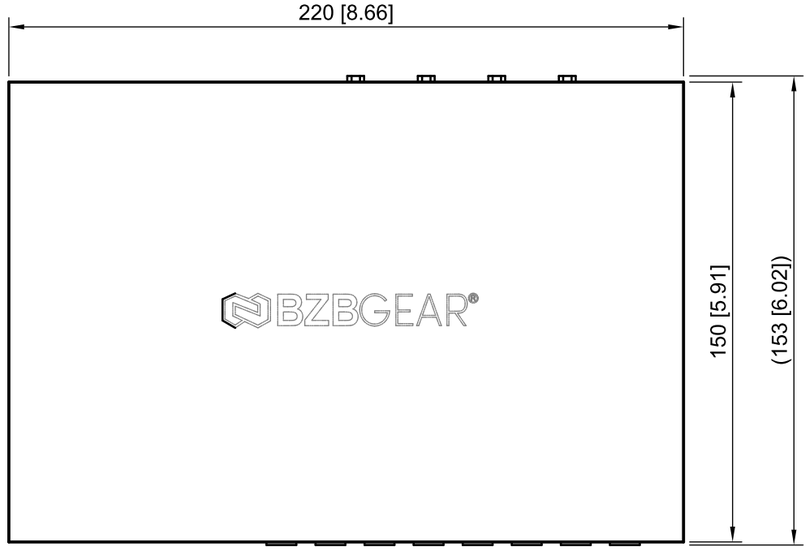

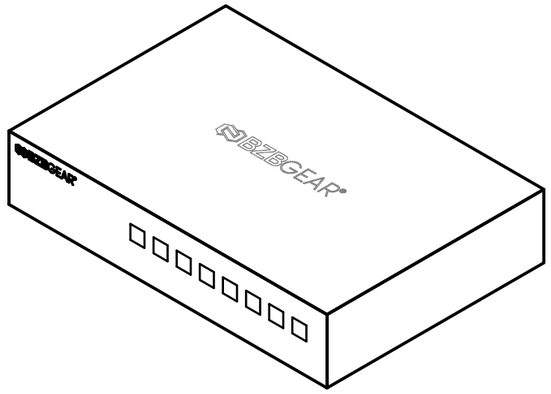

ISOMETRIC VIEW
(REFERENCE, 1:3)

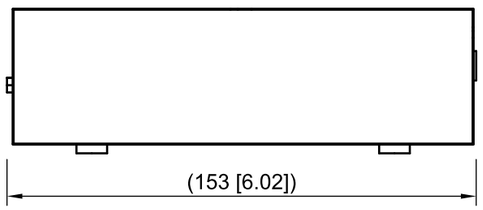

LEFT SIDE VIEW

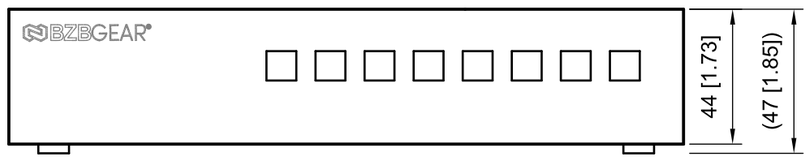

FRONT VIEW

SPECIFICATIONS (REFERENCE)

PARAMETER	VALUE
HDR SUPPORT	Input supported; output not supported
POE SUPPORT	Yes (TX PSE, RX PD)
USB SUPPORT	USB 2.0 local KVM and USB extension over HDBaseT
HOUSING	Aluminum front panel, metal enclosure
COLOR	Black
DIMENSIONS	8.7 x 5.9 x 1.7 in [220 x 150 x 44 mm]
DIMENSIONS	5.5 x 4.1 x 0.85 in [140 x 105 x 21.5 mm]
WEIGHT	2.7 lbs [1.21 kg]
WEIGHT	0.93 lbs [424 g]
POWER SUPPLY	AC 100–240V, DC 24V / 8A
OPERATING TEMP.	32°F to 104°F / 0°C to 40°C

NOTES:
1. ALL DIMENSIONS IN MILLIMETERS [INCHES]. DO NOT SCALE DRAWING.
2. DIMENSIONS ARE NOMINAL; TOLERANCE ±0.5 mm [±0.02 in] UNLESS OTHERWISE SPECIFIED.
3. ( ) REFERENCE DIMENSIONS INCLUDE FEET, KNOBS, CONNECTORS AND OTHER PROTRUSIONS.
4. GEOMETRY FROM THE MANUFACTURER CAD; PANEL DETAILS ON THE FOLLOWING SHEETS.
5. CONNECTOR TYPES IDENTIFIED FROM OUTLINE GEOMETRY; CONFIRM AGAINST THE PRODUCT LABELS.

PROPRIETARY: THIS DRAWING AND THE INFORMATION IT CONTAINS ARE THE PROPERTY OF BZBGEAR.
SPECIFICATIONS ARE SUBJECT TO CHANGE WITHOUT NOTICE.

	NAME	DATE
DRAWN	BZBGEAR	2026-11-08
CHECKED		
APPROVED		
UNITS	mm [in]	
TOLERANCE	±0.5 mm [±0.02 in] U.O.S.	
MATERIAL	ALUMINUM FRONT PANEL, METAL EN	
FINISH	BLACK	
	THIRD ANGLE PROJECTION	

BZBGEAR®
830 National Dr Ste 140, Sacramento, CA 95834, USA
Office: (888) 499-9906 | Local: +1 (916) 383-3154 | info@bzbgear.com

TITLE
5X1 4K60 18GBPS SEAMLESS HDMI/USB-C PRESENTATION SWITCHER...
OUTLINE DIMENSIONS

MODEL / DWG NO.
BG-PSC51-4K-TX

SIZE	SCALE	WEIGHT	SHEET	REV
A3	1:2	1.210 kg	1 OF 3	R01

REVISIONS				
	REV	DESCRIPTION	DATE	APPROVED
	R01	INITIAL RELEASE	2026-11-08	

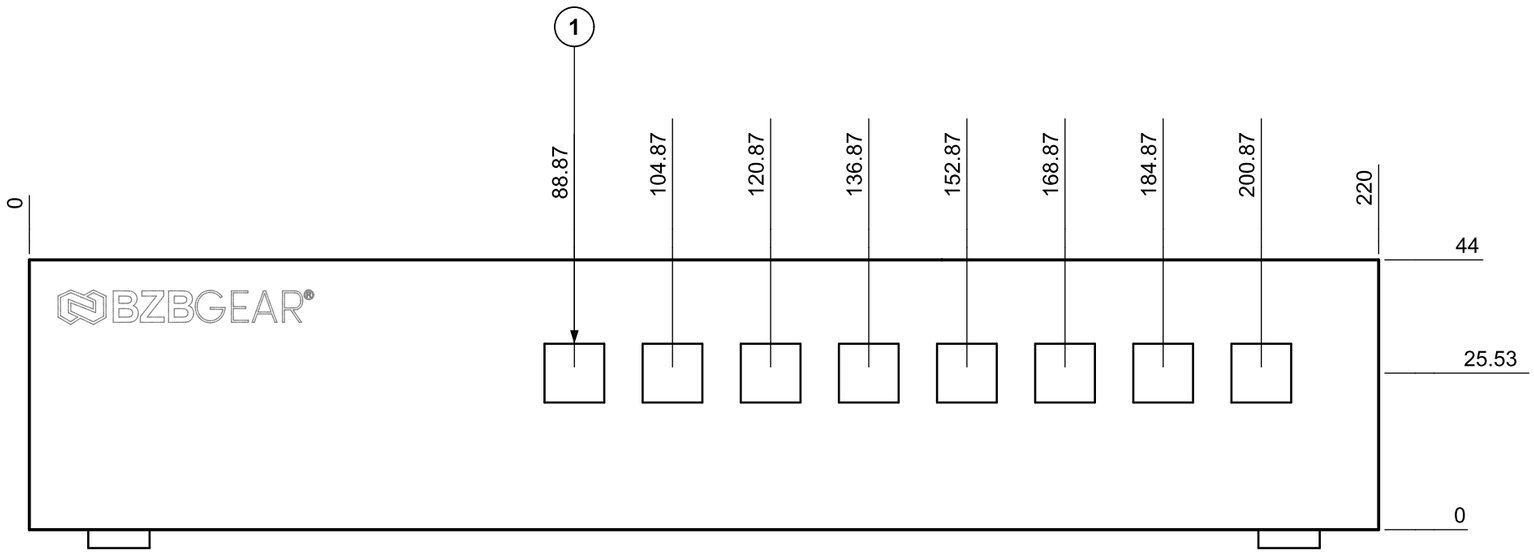

FRONT PANEL

ORDINATE DIMENSIONS TO FEATURE CENTRES FROM THE LOWER-LEFT CORNER OF THE PANEL AS VIEWED.

FRONT PANEL CALLOUTS

ITEM	DESCRIPTION	QTY
1	BUTTON / KEY 9.74 X 9.58	8

PROPRIETARY: THIS DRAWING AND THE INFORMATION IT CONTAINS ARE THE PROPERTY OF BZBGEAR.
SPECIFICATIONS ARE SUBJECT TO CHANGE WITHOUT NOTICE.

	NAME	DATE
DRAWN	BZBGEAR	2026-11-08
CHECKED		
APPROVED		
UNITS	mm [in]	
TOLERANCE	±0.5 mm [±0.02 in] U.O.S.	
MATERIAL	ALUMINUM FRONT PANEL, METAL EN	
FINISH	BLACK	
	THIRD ANGLE PROJECTION	

BZBGEAR®
830 National Dr Ste 140, Sacramento, CA 95834, USA
Office: (888) 499-9906 | Local: +1 (916) 383-3154 | info@bzbgear.com

TITLE
5X1 4K60 18GBPS SEAMLESS HDMI/USB-C PRESENTATION SWITCHER...
FRONT PANEL DETAILS

MODEL / DWG NO.
BG-PSC51-4K-TX

SIZE	SCALE	WEIGHT	SHEET	REV
A3	1:1	1.210 kg	2 OF 3	R01

REVISIONS	REV	DESCRIPTION	DATE	APPROVED
	R01	INITIAL RELEASE	2026-11-08	

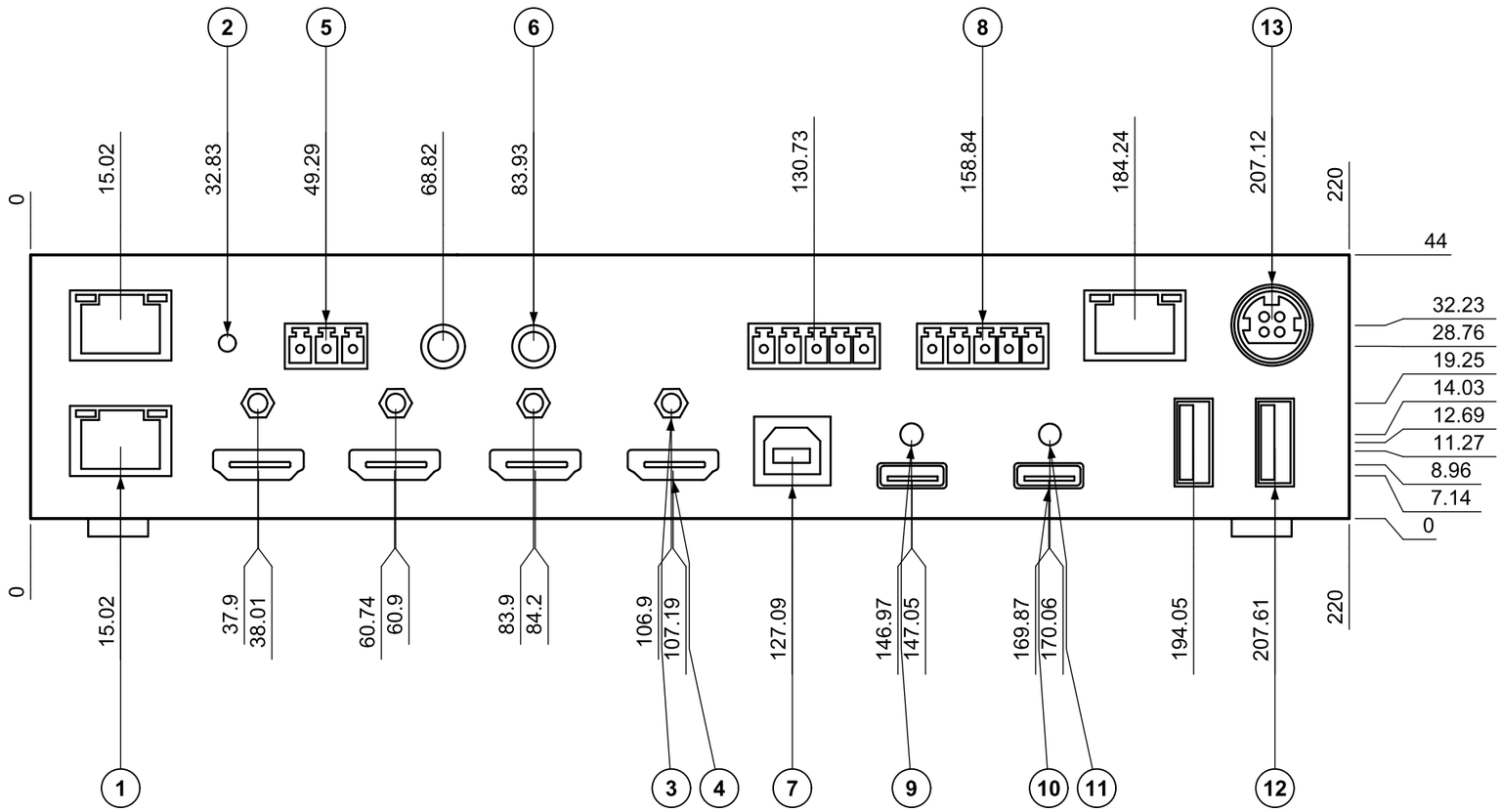

REAR PANEL
(VIEWED FROM REAR)

ORDINATE DIMENSIONS TO FEATURE CENTRES FROM THE LOWER-LEFT CORNER OF THE PANEL AS VIEWED.

REAR PANEL CALLOUTS

ITEM	DESCRIPTION	QTY
1	RJ45 MODULAR JACK	3
2	LED / IR / PINHOLE OPENING Ø2.84	1
3	D-SUB HEX STANDOFF	4
4	HDMI TYPE-A RECEPTACLE	4
5	PLUGGABLE TERMINAL BLOCK, 3-POLE, 13.76 X 7.56	1
6	3.5 mm JACK	2
7	USB TYPE-B RECEPTACLE	1
8	PLUGGABLE TERMINAL BLOCK, 5-POLE, 21.94 X 7.56	2
9	LED / IR / PINHOLE OPENING Ø3.71	1
10	OPENING / FEATURE 11.51 X 4.2	2
11	LED / IR / PINHOLE OPENING Ø3.61	1
12	USB TYPE-A RECEPTACLE	2
13	BNC / ROUND CONNECTOR Ø13.54	1

PROPRIETARY: THIS DRAWING AND THE INFORMATION IT CONTAINS ARE THE PROPERTY OF BZBGEAR.
SPECIFICATIONS ARE SUBJECT TO CHANGE WITHOUT NOTICE.

	NAME	DATE
DRAWN	BZBGEAR	2026-11-08
CHECKED		
APPROVED		
UNITS	mm [in]	
TOLERANCE	±0.5 mm [±0.02 in] U.O.S.	
MATERIAL	ALUMINUM FRONT PANEL, METAL EN	
FINISH	BLACK	
	THIRD ANGLE PROJECTION	

BZBGEAR®
830 National Dr Ste 140, Sacramento, CA 95834, USA
Office: (888) 499-9906 | Local: +1 (916) 383-3154 | info@bzbgear.com

TITLE
5X1 4K60 18GBPS SEAMLESS HDMI/USB-C PRESENTATION SWITCHER...
REAR PANEL DETAILS

MODEL / DWG NO.
BG-PSC51-4K-TX

SIZE	SCALE	WEIGHT	SHEET	REV
A3	1:1	1.210 kg	3 OF 3	R01