REVISIONS				
	REV	DESCRIPTION	DATE	APPROVED
	R01	INITIAL RELEASE	2026-11-08	

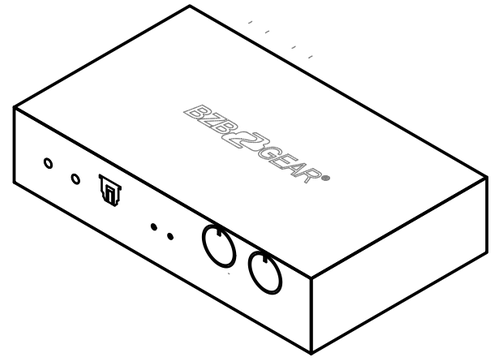

ISOMETRIC VIEW
(REFERENCE, 1:2)

TOP VIEW

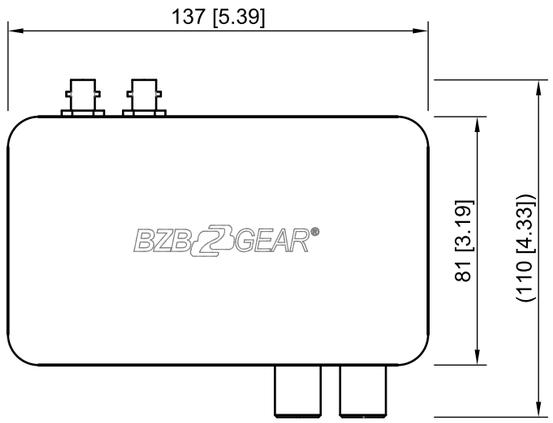

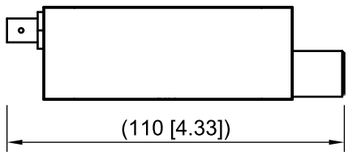

LEFT SIDE VIEW

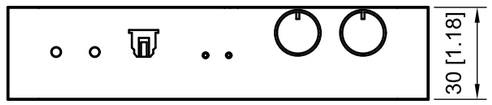

FRONT VIEW

SPECIFICATIONS (REFERENCE)

PARAMETER	VALUE
INPUT VIDEO SUPPORT	[12G-SDI] 4K2K @50/59.94/60Hz; [6G-SDI] 4K2K @23.98/24, 25, 2...
AUDIO SUPPORT	HDMI output/ SDI loopout up to 7.1ch, Toslink up to 5.1ch, Stereo a...
INPUT	1x BNC(SDI) + 1x 3.5mm
OUTPUT	1x USB-C + 1x HDMI + 1x BNC(SDI) + 1x 3.5mm + 1x Toslink
HDMI CONN.	Type A [19-pin female]
USB CONN.	USB 3.1 Type C (SuperSpeed USB)
OS SUPPORT	Windows 7 /8.1 /10/11, Mac and Linux OS
HOUSING	Metal enclosure
DIMENSIONS; [L X W	Model
WEIGHT	Model
POWER SUPPLY	5V DC
POWER CONS.	8 Watts [max]

NOTES:
1. ALL DIMENSIONS IN MILLIMETERS [INCHES]. DO NOT SCALE DRAWING.
2. DIMENSIONS ARE NOMINAL; TOLERANCE ±0.5 mm [±0.02 in] UNLESS OTHERWISE SPECIFIED.
3. ( ) REFERENCE DIMENSIONS INCLUDE FEET, KNOBS, CONNECTORS AND OTHER PROTRUSIONS.
4. GEOMETRY FROM THE MANUFACTURER CAD; PANEL DETAILS ON THE FOLLOWING SHEETS.
5. CONNECTOR TYPES IDENTIFIED FROM OUTLINE GEOMETRY; CONFIRM AGAINST THE PRODUCT LABELS.

PROPRIETARY: THIS DRAWING AND THE INFORMATION IT CONTAINS ARE THE PROPERTY OF BZBGEAR.
SPECIFICATIONS ARE SUBJECT TO CHANGE WITHOUT NOTICE.

	NAME	DATE
DRAWN	BZBGEAR	2026-11-08
CHECKED		
APPROVED		
UNITS	mm [in]	
TOLERANCE	±0.5 mm [±0.02 in] U.O.S.	
MATERIAL	METAL ENCLOSURE	
FINISH	BLACK	
	THIRD ANGLE PROJECTION	

BZBGEAR®
830 National Dr Ste 140, Sacramento, CA 95834, USA
Office: (888) 499-9906 | Local: +1 (916) 383-3154 | info@bzbgear.com

TITLE
USB-C 12G-SDI VIDEO CAPTURE CARD BOX WITH SCALER/HDMI...
OUTLINE DIMENSIONS

MODEL / DWG NO.
BG-12GCSA

SIZE	SCALE	WEIGHT	SHEET	REV
A3	1:2	-	1 OF 3	R01

REVISIONS				
	REV	DESCRIPTION	DATE	APPROVED
	R01	INITIAL RELEASE	2026-11-08	

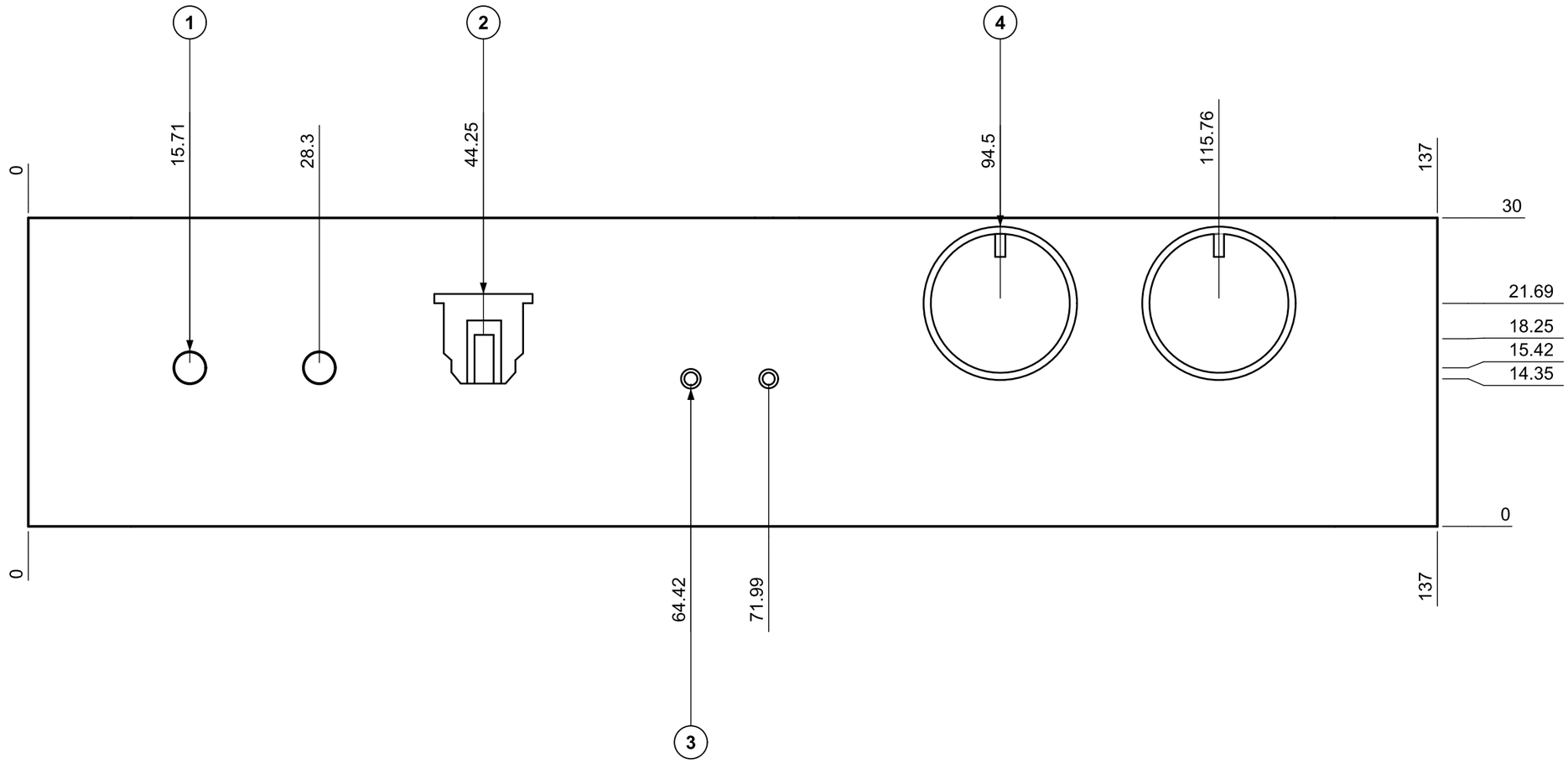

FRONT PANEL

ORDINATE DIMENSIONS TO FEATURE CENTRES FROM THE LOWER-LEFT CORNER OF THE PANEL AS VIEWED.

FRONT PANEL CALLOUTS

ITEM	DESCRIPTION	QTY
1	3.5 mm JACK	2
2	OPTICAL AUDIO (TOSLINK)	1
3	LED INDICATOR	2
4	ROTARY CONTROL KNOB Ø16.2	2

PROPRIETARY: THIS DRAWING AND THE INFORMATION IT CONTAINS ARE THE PROPERTY OF BZBGEAR.
SPECIFICATIONS ARE SUBJECT TO CHANGE WITHOUT NOTICE.

	NAME	DATE
DRAWN	BZBGEAR	2026-11-08
CHECKED		
APPROVED		
UNITS	mm [in]	
TOLERANCE	±0.5 mm [±0.02 in] U.O.S.	
MATERIAL	METAL ENCLOSURE	
FINISH	BLACK	
	THIRD ANGLE PROJECTION	

BZBGEAR®
830 National Dr Ste 140, Sacramento, CA 95834, USA
Office: (888) 499-9906 | Local: +1 (916) 383-3154 | info@bzbgear.com

TITLE
USB-C 12G-SDI VIDEO CAPTURE CARD BOX WITH SCALER/HDMI...
FRONT PANEL DETAILS

MODEL / DWG NO.
BG-12GCSA

SIZE	SCALE	WEIGHT	SHEET	REV
A3	2:1	-	2 OF 3	R01

REVISIONS	REV	DESCRIPTION	DATE	APPROVED
	R01	INITIAL RELEASE	2026-11-08	

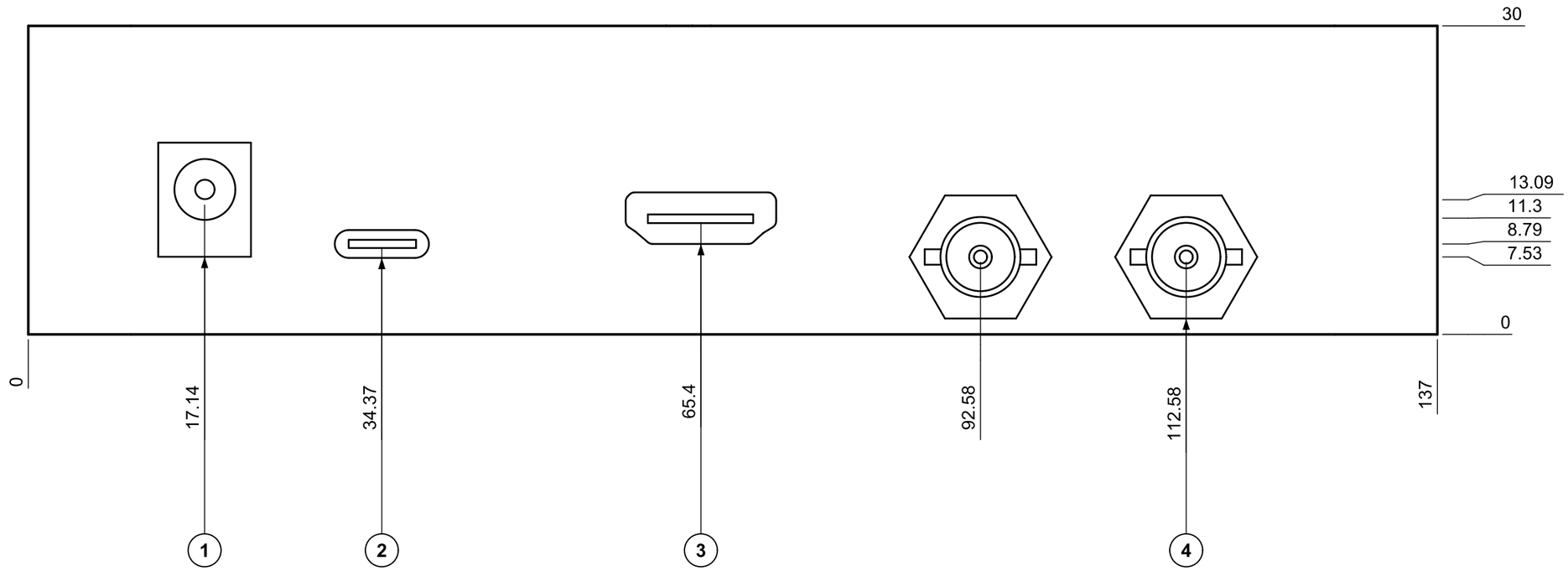

REAR PANEL
(VIEWED FROM REAR)

ORDINATE DIMENSIONS TO FEATURE CENTRES FROM THE LOWER-LEFT CORNER OF THE PANEL AS VIEWED.

REAR PANEL CALLOUTS

ITEM	DESCRIPTION	QTY
1	DC POWER JACK	1
2	USB TYPE-C RECEPTACLE	1
3	HDMI TYPE-A RECEPTACLE	1
4	BNC FEMALE (75 OHM) Ø9.5	2

PROPRIETARY: THIS DRAWING AND THE INFORMATION IT CONTAINS ARE THE PROPERTY OF BZBGEAR.
SPECIFICATIONS ARE SUBJECT TO CHANGE WITHOUT NOTICE.

	NAME	DATE
DRAWN	BZBGEAR	2026-11-08
CHECKED		
APPROVED		
UNITS	mm [in]	
TOLERANCE	±0.5 mm [±0.02 in] U.O.S.	
MATERIAL	METAL ENCLOSURE	
FINISH	BLACK	
	THIRD ANGLE PROJECTION	

BZBGEAR®
830 National Dr Ste 140, Sacramento, CA 95834, USA
Office: (888) 499-9906 | Local: +1 (916) 383-3154 | info@bzbgear.com

TITLE
USB-C 12G-SDI VIDEO CAPTURE CARD BOX WITH SCALER/HDMI...
REAR PANEL DETAILS

MODEL / DWG NO.
BG-12GCSA

SIZE	SCALE	WEIGHT	SHEET	REV
A3	2:1	-	3 OF 3	R01