REVISIONS	REV	DESCRIPTION	DATE	APPROVED
	R01	INITIAL RELEASE	2026-11-08	

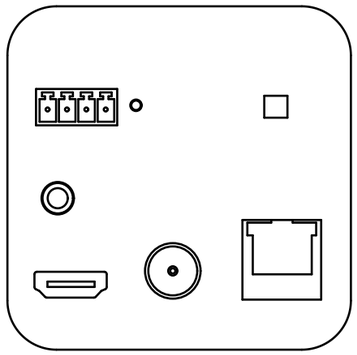

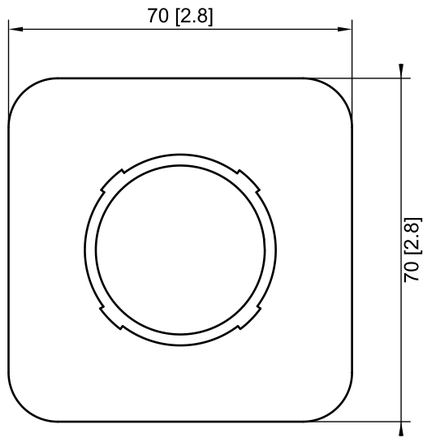

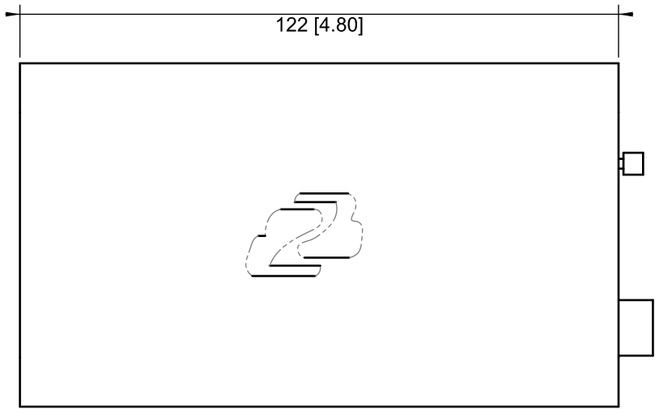

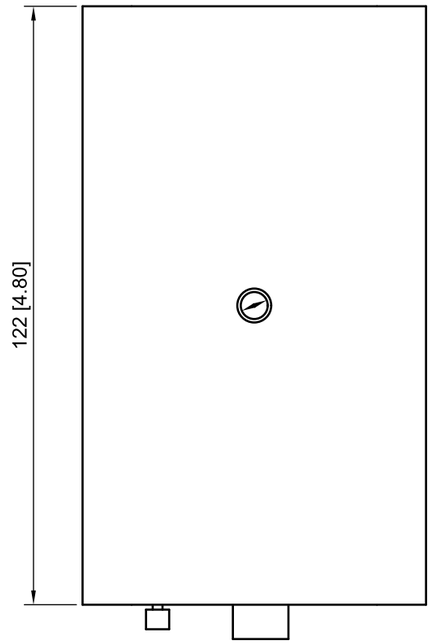

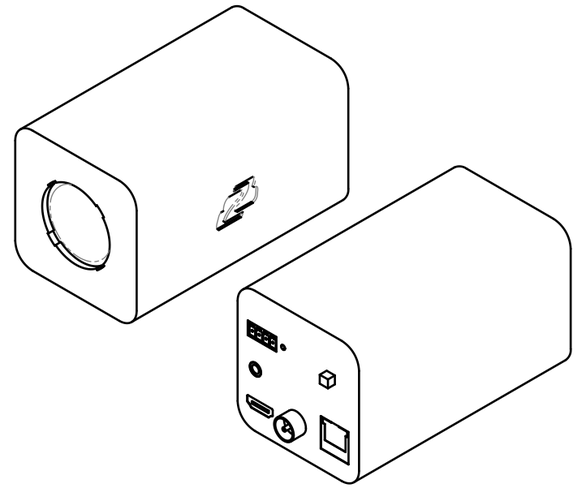

NOTES:

1. DIMENSIONS IN MILLIMETERS [INCHES] AS ON THE MANUFACTURER DRAWING. DO NOT SCALE DRAWING.
2. DIMENSIONS ARE NOMINAL; TOLERANCE ±0.5 mm [±0.02 in] UNLESS OTHERWISE SPECIFIED.
3. VIEWS AND DIMENSIONS FROM THE MANUFACTURER CAD, RE-DRAWN ON THE BZBGEAR SHEET.

PROPRIETARY: THIS DRAWING AND THE INFORMATION IT CONTAINS ARE THE PROPERTY OF BZBGEAR.
SPECIFICATIONS ARE SUBJECT TO CHANGE WITHOUT NOTICE.

	NAME	DATE
DRAWN	BZBGEAR	2026-11-08
CHECKED		
APPROVED		
UNITS	mm [in]	
TOLERANCE	±0.5 mm [±0.02 in] U.O.S.	
MATERIAL	METAL ENCLOSURE	
FINISH	BLACK	
	THIRD ANGLE PROJECTION	

BZBGEAR®
830 National Dr Ste 140, Sacramento, CA 95834, USA
Office: (888) 499-9906 | Local: +1 (916) 383-3154 | info@bzbgear.com

TITLE
1080P FHD 20X/30X HDMI/SDI/IP/NDI|HX STREAMING BOX CAMERA...
OUTLINE DIMENSIONS (MANUFACTURER VIEWS)

MODEL / DWG NO.
BG-B20SHAN

SIZE	SCALE	WEIGHT	SHEET	REV
A3	1:1.25	0.200 kg	1 OF 2	R01

REVISIONS	REV	DESCRIPTION	DATE	APPROVED
	R01	INITIAL RELEASE	2026-11-08	

CONNECTOR REFERENCE

INTERFACE	CONNECTORS / DESCRIPTION
VIDEO OUTPUT	3G-SDI / HDMI / IP Streaming / NDI□HX
AUDIO INPUT	3.5mm Stereo Mini
POWER ON	JEITA type (DC IN 12V)
COMMUNICATION INTERFACE	RS485 / RS232

NOTES:

1. CONNECTOR LIST FROM THE PRODUCT TECHNICAL SPECIFICATIONS ON BZBGEAR.COM.
2. CONNECTOR POSITIONS: SEE SHEET 1 (MANUFACTURER VIEWS).
3. CONFIRM CONNECTOR TYPES AND LABELS AGAINST THE PRODUCT.

PROPRIETARY: THIS DRAWING AND THE INFORMATION IT CONTAINS ARE THE PROPERTY OF BZBGEAR.
SPECIFICATIONS ARE SUBJECT TO CHANGE WITHOUT NOTICE.

	NAME	DATE
DRAWN	BZBGEAR	2026-11-08
CHECKED		
APPROVED		
UNITS	mm [in]	
TOLERANCE	±0.5 mm [±0.02 in] U.O.S.	
MATERIAL	METAL ENCLOSURE	
FINISH	BLACK	
	THIRD ANGLE PROJECTION	

BZBGEAR®
830 National Dr Ste 140, Sacramento, CA 95834, USA
Office: (888) 499-9906 | Local: +1 (916) 383-3154 | info@bzbgear.com

TITLE
1080P FHD 20X/30X HDMI/SDI/IP/NDI|HX STREAMING BOX CAMERA...
CONNECTORS (INPUTS / OUTPUTS / CONTROL / POWER)

MODEL / DWG NO.
BG-B20SHAN

SIZE	SCALE	WEIGHT	SHEET	REV
A3	NTS	0.200 kg	2 OF 2	R01