REVISIONS				
	REV	DESCRIPTION	DATE	APPROVED
	R01	INITIAL RELEASE	2026-11-08	

TOP VIEW

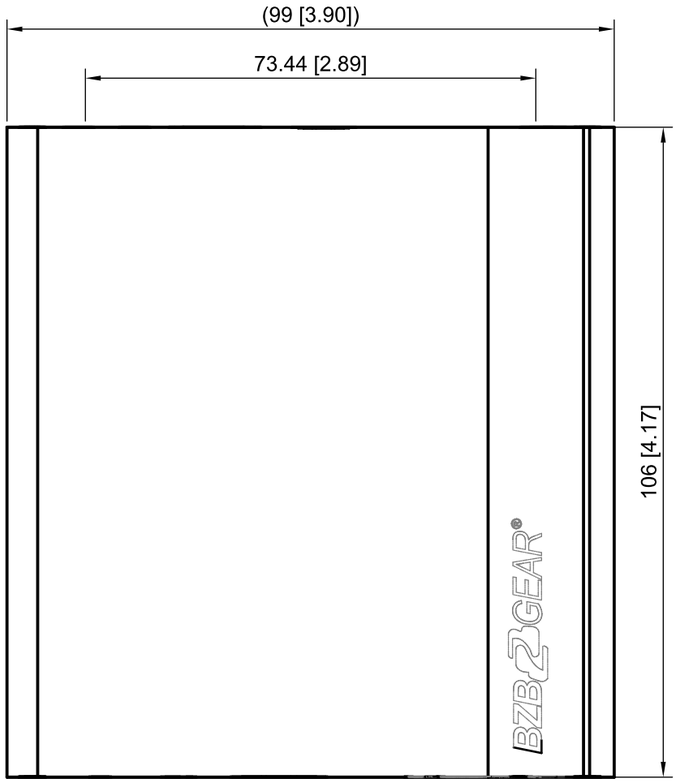

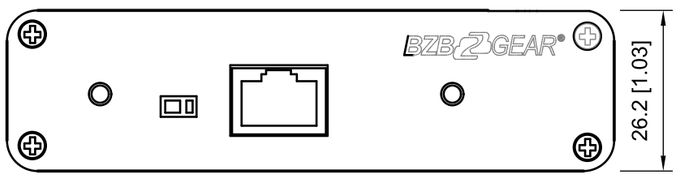

FRONT VIEW

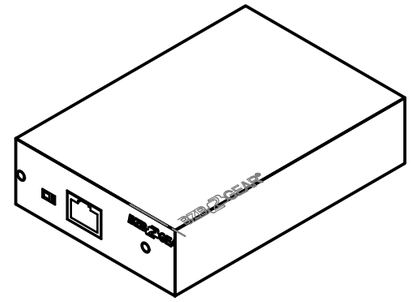

ISOMETRIC VIEW
(REFERENCE, 1:2)

SPECIFICATIONS (REFERENCE)

PARAMETER	VALUE
POWER SUPPLY	TX: DC 12V/2A; RX: DC 5V/2A
POWER CONS.	TX<13W; RX<4W
MATERIAL	Aluminum alloy material + crystal panel
COLOR	Black
WEIGHT	TX: 1.4lbs [640g]; RX: 0.46lbs [210g]
DIMENSION	TX: 9.7"(L) x 4.5"(W) x 0.9"(H) [264.00(L) x 104.00(W) x 23.50(H)m...

NOTES:
1. ALL DIMENSIONS IN MILLIMETERS [INCHES]. DO NOT SCALE DRAWING.
2. DIMENSIONS ARE NOMINAL; TOLERANCE ±0.5 mm [±0.02 in] UNLESS OTHERWISE SPECIFIED.
3. ( ) REFERENCE DIMENSIONS INCLUDE FEET, KNOBS, CONNECTORS AND OTHER PROTRUSIONS.
4. GEOMETRY FROM THE MANUFACTURER CAD; PANEL DETAILS ON THE FOLLOWING SHEETS.
5. CONNECTOR TYPES IDENTIFIED FROM OUTLINE GEOMETRY; CONFIRM AGAINST THE PRODUCT LABELS.

PROPRIETARY: THIS DRAWING AND THE INFORMATION IT CONTAINS ARE THE PROPERTY OF BZBGEAR.
SPECIFICATIONS ARE SUBJECT TO CHANGE WITHOUT NOTICE.

	NAME	DATE
DRAWN	BZBGEAR	2026-11-08
CHECKED		
APPROVED		
UNITS	mm [in]	
TOLERANCE	±0.5 mm [±0.02 in] U.O.S.	
MATERIAL	ALUMINUM ALLOY MATERIAL + CRYS	
FINISH	BLACK	
	THIRD ANGLE PROJECTION	

BZBGEAR®
830 National Dr Ste 140, Sacramento, CA 95834, USA
Office: (888) 499-9906 | Local: +1 (916) 383-3154 | info@bzbgear.com

TITLE
1X4 4K UHD HDMI SPLITTER/DISTRIBUTION AMPLIFIER KIT WITH 4...
OUTLINE DIMENSIONS

MODEL / DWG NO.
BG-UDAIC-E14-RX

SIZE	SCALE	WEIGHT	SHEET	REV
A3	1:1	0.640 kg	1 OF 3	R01

REVISIONS	REV	DESCRIPTION	DATE	APPROVED
	R01	INITIAL RELEASE	2026-11-08	

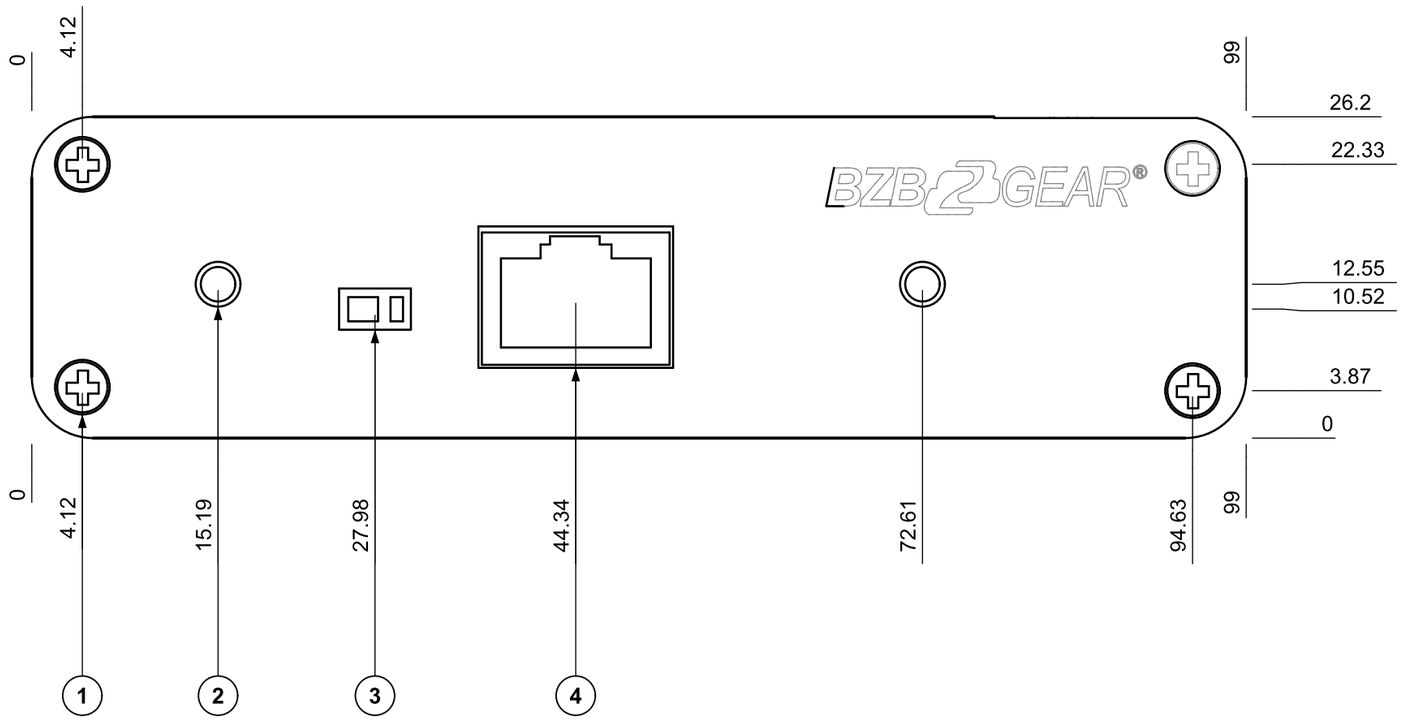

FRONT PANEL

ORDINATE DIMENSIONS TO FEATURE CENTRES FROM THE LOWER-LEFT CORNER OF THE PANEL AS VIEWED.

FRONT PANEL CALLOUTS

ITEM	DESCRIPTION	QTY
1	3.5 mm JACK	3
2	LED / IR / PINHOLE OPENING Ø3.65	2
3	OPENING / FEATURE 5.85 X 3.36	1
4	RJ45 MODULAR JACK	1

PROPRIETARY: THIS DRAWING AND THE INFORMATION IT CONTAINS ARE THE PROPERTY OF BZBGEAR.
SPECIFICATIONS ARE SUBJECT TO CHANGE WITHOUT NOTICE.

	NAME	DATE
DRAWN	BZBGEAR	2026-11-08
CHECKED		
APPROVED		
UNITS	mm [in]	
TOLERANCE	±0.5 mm [±0.02 in] U.O.S.	
MATERIAL	ALUMINUM ALLOY MATERIAL + CRYS	
FINISH	BLACK	
	THIRD ANGLE PROJECTION	

BZBGEAR®
830 National Dr Ste 140, Sacramento, CA 95834, USA
Office: (888) 499-9906 | Local: +1 (916) 383-3154 | info@bzbgear.com

TITLE
1X4 4K UHD HDMI SPLITTER/DISTRIBUTION AMPLIFIER KIT WITH 4...
FRONT PANEL DETAILS

MODEL / DWG NO.
BG-UDAIC-E14-RX

SIZE	SCALE	WEIGHT	SHEET	REV
A3	2:1	0.640 kg	2 OF 3	R01

REVISIONS	REV	DESCRIPTION	DATE	APPROVED
	R01	INITIAL RELEASE	2026-11-08	

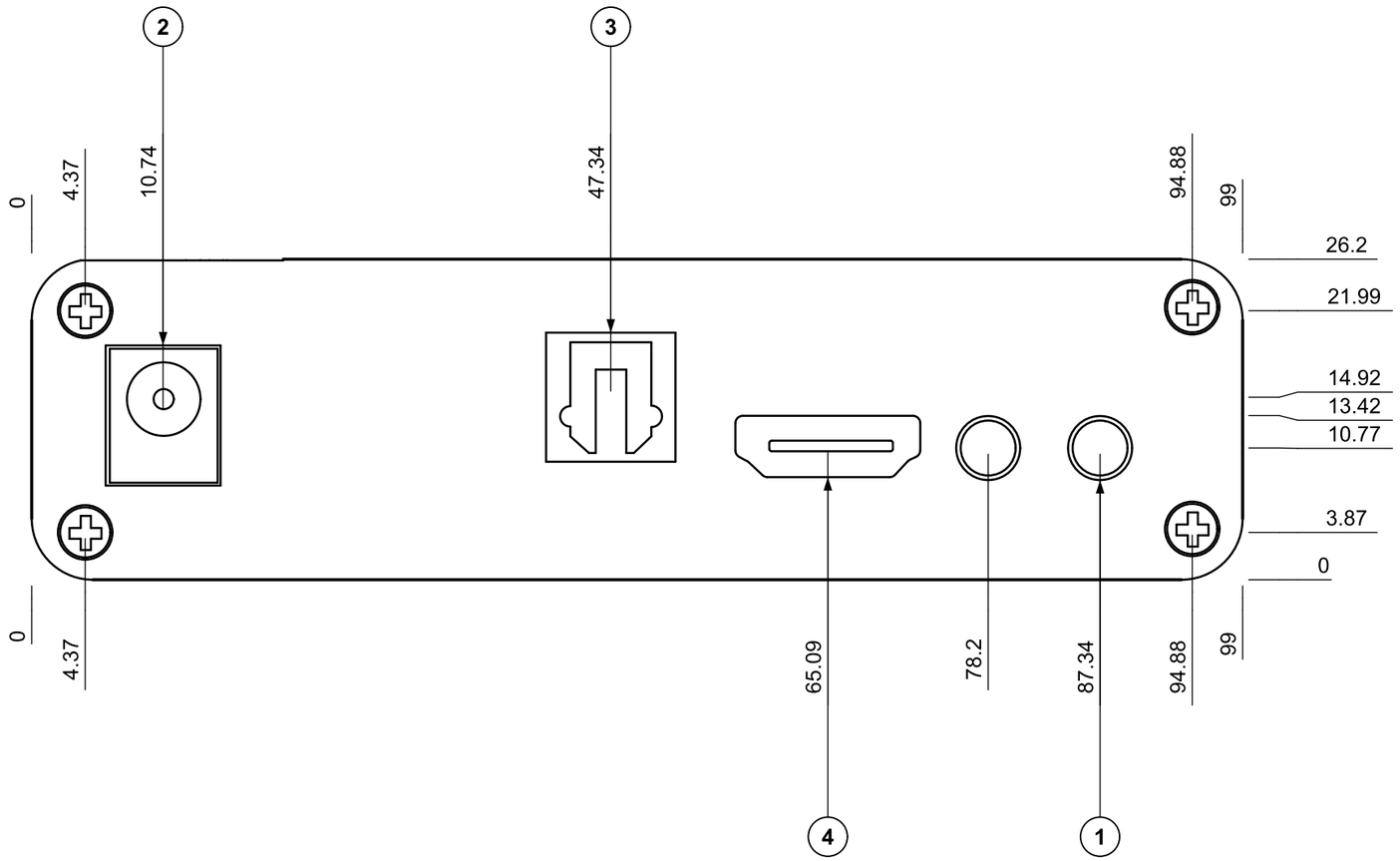

ORDINATE DIMENSIONS TO FEATURE CENTRES FROM THE LOWER-LEFT CORNER OF THE PANEL AS VIEWED.

REAR PANEL
(VIEWED FROM REAR)

REAR PANEL CALLOUTS

ITEM	DESCRIPTION	QTY
1	3.5 mm JACK	6
2	RACK EAR MOUNTING SLOT 9.39 X 11.45	1
3	USB TYPE-B RECEPTACLE	1
4	HDMI TYPE-A RECEPTACLE	1

PROPRIETARY: THIS DRAWING AND THE INFORMATION IT CONTAINS ARE THE PROPERTY OF BZBGEAR.
SPECIFICATIONS ARE SUBJECT TO CHANGE WITHOUT NOTICE.

	NAME	DATE
DRAWN	BZBGEAR	2026-11-08
CHECKED		
APPROVED		
UNITS	mm [in]	
TOLERANCE	±0.5 mm [±0.02 in] U.O.S.	
MATERIAL	ALUMINUM ALLOY MATERIAL + CRYS	
FINISH	BLACK	
	THIRD ANGLE PROJECTION	

BZBGEAR®
830 National Dr Ste 140, Sacramento, CA 95834, USA
Office: (888) 499-9906 | Local: +1 (916) 383-3154 | info@bzbgear.com

TITLE
1X4 4K UHD HDMI SPLITTER/DISTRIBUTION AMPLIFIER KIT WITH 4...
REAR PANEL DETAILS

MODEL / DWG NO.
BG-UDAIC-E14-RX

SIZE	SCALE	WEIGHT	SHEET	REV
A3	2:1	0.640 kg	3 OF 3	R01