REVISIONS				
	REV	DESCRIPTION	DATE	APPROVED
	R01	INITIAL RELEASE	2026-11-08	

TOP VIEW

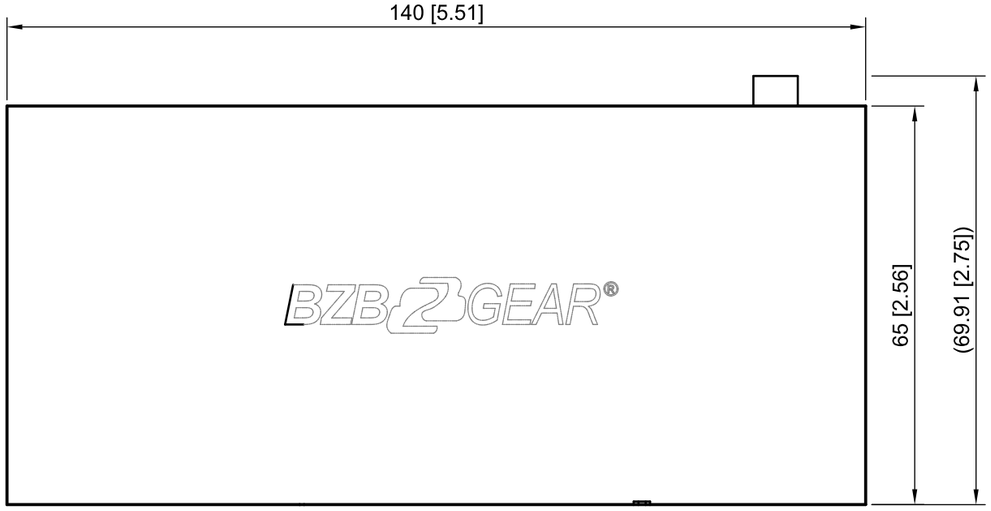



FRONT VIEW

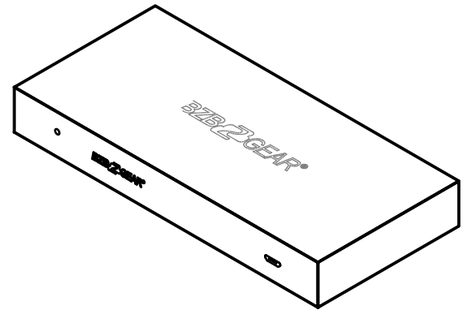

ISOMETRIC VIEW
(REFERENCE, 1:2)

SPECIFICATIONS (REFERENCE)

PARAMETER	VALUE
HOUSING	Metal Enclosure
COLOR	Black
DIMENSIONS	Transmitter / Receiver: 5.5" (W) x 2.5" (D) x 0.7" (H) [140mm (W) x...
WEIGHT	Transmitter: 0.35lbs [160g], Receiver: 0.34lbs [155g]
POWER SUPPLY	Input: AC 100 - 240V 50/60Hz; Output: DC 24V/1A (Locking connect...
POWER CONS.	9.36 W
OPERATING TEMP.	32 - 104°F / 0 - 40°C

NOTES:
1. ALL DIMENSIONS IN MILLIMETERS [INCHES]. DO NOT SCALE DRAWING.
2. DIMENSIONS ARE NOMINAL; TOLERANCE ±0.5 mm [±0.02 in] UNLESS OTHERWISE SPECIFIED.
3. ( ) REFERENCE DIMENSIONS INCLUDE FEET, KNOBS, CONNECTORS AND OTHER PROTRUSIONS.
4. GEOMETRY FROM THE MANUFACTURER CAD; PANEL DETAILS ON THE FOLLOWING SHEETS.
5. CONNECTOR TYPES IDENTIFIED FROM OUTLINE GEOMETRY; CONFIRM AGAINST THE PRODUCT LABELS.

PROPRIETARY: THIS DRAWING AND THE INFORMATION IT CONTAINS ARE THE PROPERTY OF BZBGEAR.
SPECIFICATIONS ARE SUBJECT TO CHANGE WITHOUT NOTICE.

	NAME	DATE
DRAWN	BZBGEAR	2026-11-08
CHECKED		
APPROVED		
UNITS	mm [in]	
TOLERANCE	±0.5 mm [±0.02 in] U.O.S.	
MATERIAL	METAL ENCLOSURE	
FINISH	BLACK	
	THIRD ANGLE PROJECTION	

BZBGEAR®
830 National Dr Ste 140, Sacramento, CA 95834, USA
Office: (888) 499-9906 | Local: +1 (916) 383-3154 | info@bzbgear.com

TITLE
4K UHD HDMI HDBASET LONG RANGE EXTENDER WITH BI-DIRECTIONAL...
OUTLINE DIMENSIONS

MODEL / DWG NO.
BG-EXH-150C

SIZE	SCALE	WEIGHT	SHEET	REV
A3	1:1	0.160 kg	1 OF 3	R01

REVISIONS				
	REV	DESCRIPTION	DATE	APPROVED
	R01	INITIAL RELEASE	2026-11-08	



FRONT PANEL

ORDINATE DIMENSIONS TO FEATURE CENTRES FROM THE LOWER-LEFT CORNER OF THE PANEL AS VIEWED.

FRONT PANEL CALLOUTS

ITEM	DESCRIPTION	QTY
1	LED INDICATOR	1
2	OPENING / FEATURE 7 X 1.89	1

PROPRIETARY: THIS DRAWING AND THE INFORMATION IT CONTAINS ARE THE PROPERTY OF BZBGEAR.
SPECIFICATIONS ARE SUBJECT TO CHANGE WITHOUT NOTICE.

	NAME	DATE
DRAWN	BZBGEAR	2026-11-08
CHECKED		
APPROVED		
UNITS	mm [in]	
TOLERANCE	±0.5 mm [±0.02 in] U.O.S.	
MATERIAL	METAL ENCLOSURE	
FINISH	BLACK	
	THIRD ANGLE PROJECTION	

BZBGEAR®
830 National Dr Ste 140, Sacramento, CA 95834, USA
Office: (888) 499-9906 | Local: +1 (916) 383-3154 | info@bzbgear.com

TITLE
4K UHD HDMI HDBASET LONG RANGE EXTENDER WITH BI-DIRECTIONAL...
FRONT PANEL DETAILS

MODEL / DWG NO.
BG-EXH-150C

SIZE	SCALE	WEIGHT	SHEET	REV
A3	2:1	0.160 kg	2 OF 3	R01

REVISIONS	REV	DESCRIPTION	DATE	APPROVED
	R01	INITIAL RELEASE	2026-11-08	

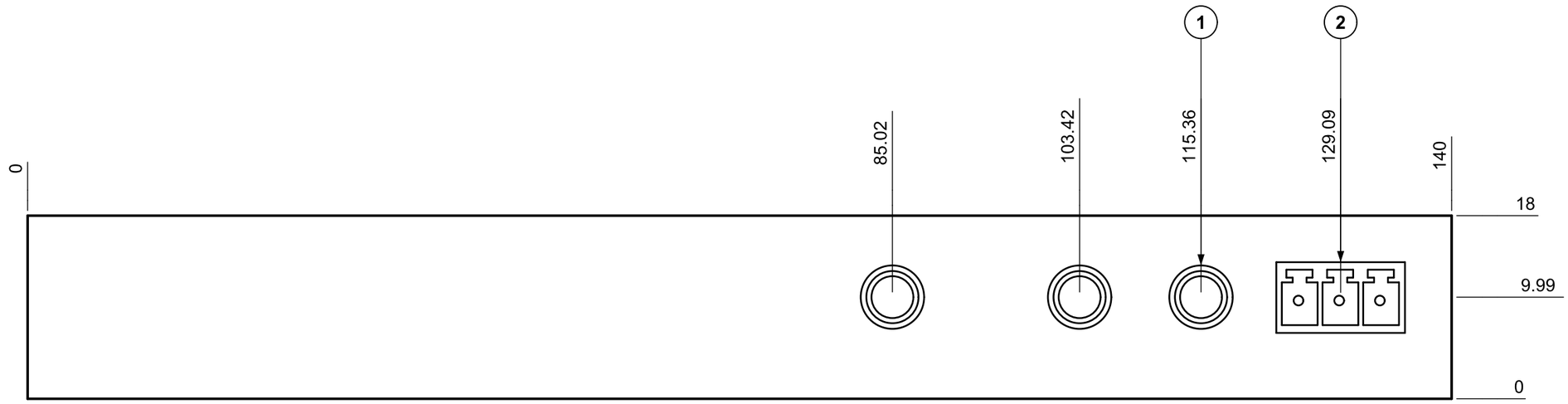

REAR PANEL
(VIEWED FROM REAR)

ORDINATE DIMENSIONS TO FEATURE CENTRES FROM THE LOWER-LEFT CORNER OF THE PANEL AS VIEWED.

REAR PANEL CALLOUTS

ITEM	DESCRIPTION	QTY
1	3.5 mm JACK	3
2	PLUGGABLE TERMINAL BLOCK, 3-POLE, 12.65 X 6.95	1

PROPRIETARY: THIS DRAWING AND THE INFORMATION IT CONTAINS ARE THE PROPERTY OF BZBGEAR.
SPECIFICATIONS ARE SUBJECT TO CHANGE WITHOUT NOTICE.

	NAME	DATE
DRAWN	BZBGEAR	2026-11-08
CHECKED		
APPROVED		
UNITS	mm [in]	
TOLERANCE	±0.5 mm [±0.02 in] U.O.S.	
MATERIAL	METAL ENCLOSURE	
FINISH	BLACK	
	THIRD ANGLE PROJECTION	

BZBGEAR®
830 National Dr Ste 140, Sacramento, CA 95834, USA
Office: (888) 499-9906 | Local: +1 (916) 383-3154 | info@bzbgear.com

TITLE
4K UHD HDMI HDBASET LONG RANGE EXTENDER WITH BI-DIRECTIONAL...
REAR PANEL DETAILS

MODEL / DWG NO.
BG-EXH-150C

SIZE	SCALE	WEIGHT	SHEET	REV
A3	2:1	0.160 kg	3 OF 3	R01